Armkap | Mondolfo Ferro 429971B

Mondolfo Ferro AS914 TI · 2026 · Tekening 6 · positie 9

FINO A MATR. / UP TO S/N CSF014921

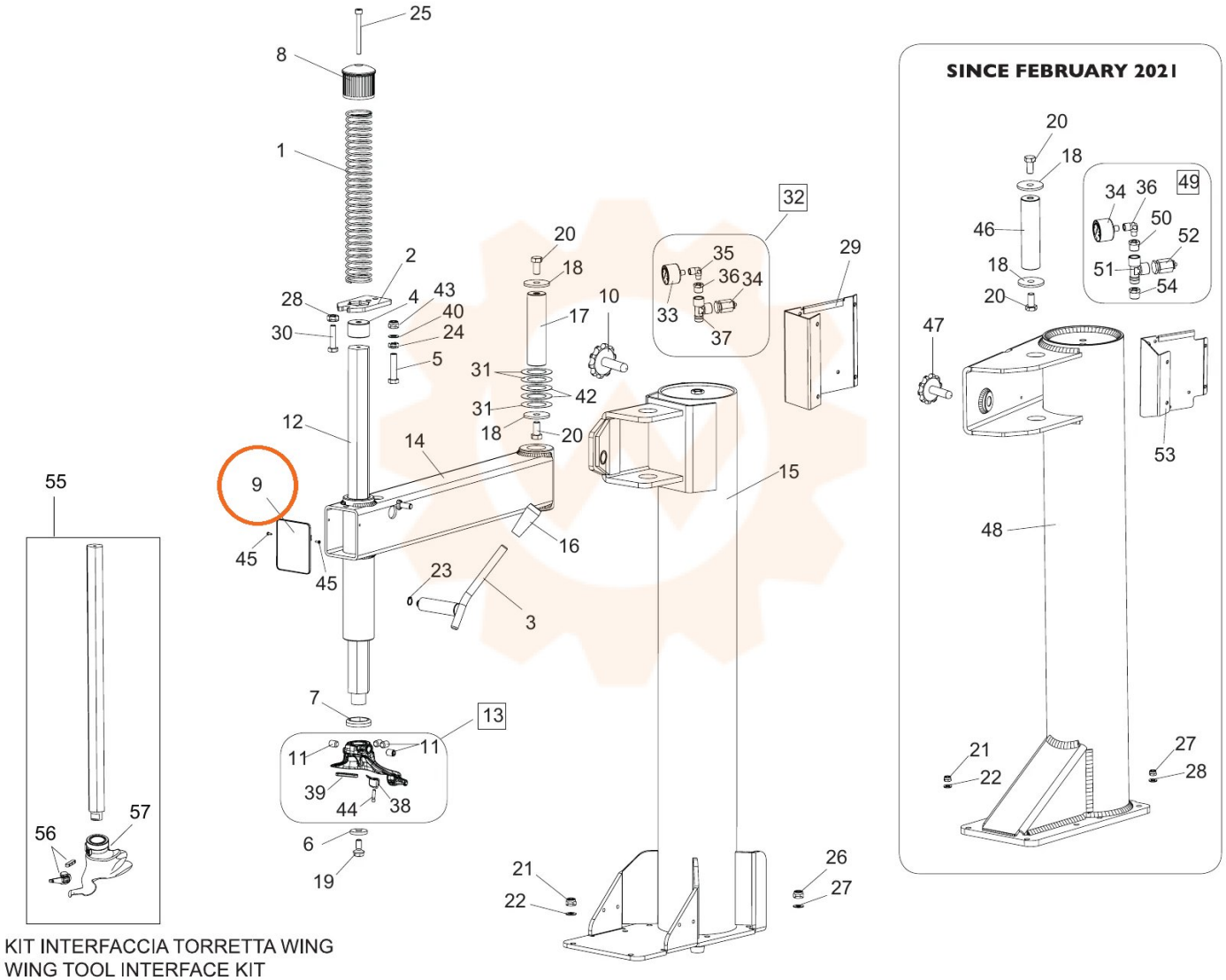

KIT INTERFACCIA TORRETTA WING
WING TOOL INTERFACE KIT