20-3+S 2-jaw universal puller with narrow, quick adjustment jaws, up to 250 mm spread, 200 mm reach



APPLICATION IMAGE



DESCRIPTION

The 2-jaw universal puller with narrow, quickly adjustable jaws is used for the safe and user-friendly removal of bearings, gears, and discs in all common sizes for craft, workshop, and industry. This allows for the loosening of any component seated on a shaft and freely accessible from the outside. The narrow jaws ensure that even tight and hard-to-reach gaps can be accessed.

APPLICATION AREA

For the safe and user-friendly removal of bearings, gears, and discs in all common sizes for crafts, workshops, and industry.

BENEFIT

- Narrow jaws grip optimally in tight and hard-to-reach places.
- Simple manual adjustment of the jaws using hand knobs (Quick Adjust Technology)
- Application also for eccentric components through freely movable, sliding puller jaws on the crossbar.
- Hexagonal profile on the crossbar for secure counterholding
- Quick-adjustable jaws guarantee immediate adjustment to any spread between 21 mm – 250 mm
- Shear-proof mounting of the claw in the sliding piece (Armlock Technology)
- Secure installation of the spindle with rotatable spindle tip on both smooth surfaces and in centering (Switch Technology)
- Optional convertible from an external puller to an internal puller by reversing the jaws.
- Anti-slip safety (spindle neck) at the spindle head for safe work with the wrench
- Spindle output to protect the thread
- Jaws, spindle, and crossbar have a spare part number for easy reordering.
- Pullers are labeled with technical attributes and manufacturer information (label)

OPERATION

- Position the puller jaws externally onto the part to be pulled off
- Slide the claws under the component
- Use the hand knob for manual fastening of the jaws
- Manually pull the spindle for fixation
- Set the hexagon on the spindle head in motion with a ratchet or a wrench until the component is loosened

MASTER DATA

GTIN [GTIN]	4021176756634
Country of origin	DE
Material	Tool steel
Series	20+S
Gross weight [kg]	6,885 kg
Package contents	1 piece
Packaging Act	PAPPE PAP 21
Worldwide sales capability	Yes (REACH, RoHS, POP, PROP65, TSCA)

SPARE PARTS

- 20-3-T_Traverse for 20-3
- 3-203-P_Narrow, quick adjustment jaws (pair)
- 626300_Mechanical spindle
- 626300_Mechanical spindle

2-jaw universal puller with narrow, quick adjustment jaws, up to 250 mm spread, 200 mm reach

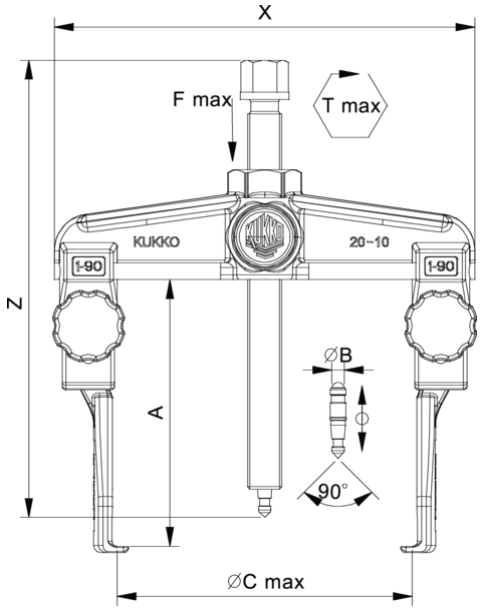

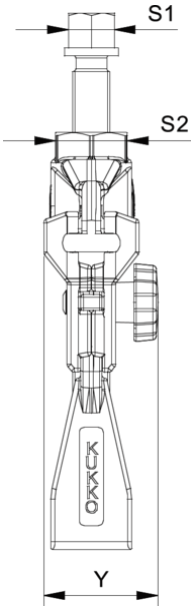

Abbreviation	Attribut	Wert
X	Total width [mm]	330 mm
Y	Total depth [mm]	67 mm
Z	Total height [mm]	337 mm
A	Clamping depth of external puller [mm]	200 mm
S1	Width across flats [mm]	27 mm
S2	Width across flats [mm]	46 mm
Cmin	Span outside pull-off (min.) [mm]	21 mm
Cmax	Span outside pull-off (max.) [mm]	250 mm
K	Hook root thickness at the tip (claw thickness K) [mm]	6,5 mm
J	Hook base width (claw width J) [mm]	35 mm
O	Hook base depth usable (claw depth usable O) [mm]	22 mm
H	Total hook root depth (total claw depth H) [mm]	52 mm
L	Total claw thickness (L+1mm) [mm]: (claw distance to base surface)	6,5 mm
Emin	Span inside pull-out (min.) [mm]	180 mm
Emax	Span inside pull-out (max.) [mm]	340 mm
Tmax	Max. torque [Nm]	250 Nm
Fmax	Max. tractive force [t]	9 t
Fmax	Max. tensile force [kN]	90 kN

Abbreviation	Attribut	Wert
X	Total width [mm]	330 mm
Y	Total depth [mm]	67 mm
Z	Total height [mm]	337 mm
A	Clamping depth of external puller [mm]	200 mm
S1	Width across flats [mm]	27 mm
S2	Width across flats [mm]	46 mm
Cmin	Span outside pull-off (min.) [mm]	21 mm
Cmax	Span outside pull-off (max.) [mm]	250 mm
K	Hook root thickness at the tip (claw thickness K) [mm]	6,5 mm
J	Hook base width (claw width J) [mm]	35 mm
O	Hook base depth usable (claw depth usable O) [mm]	22 mm
H	Total hook root depth (total claw depth H) [mm]	52 mm
L	Total claw thickness (L+1mm) [mm]: (claw distance to base surface)	6,5 mm
Emin	Span inside pull-out (min.) [mm]	180 mm
Emax	Span inside pull-out (max.) [mm]	340 mm
Tmax	Max. torque [Nm]	250 Nm
Fmax	Max. tractive force [t]	9 t
Fmax	Max. tensile force [kN]	90 kN

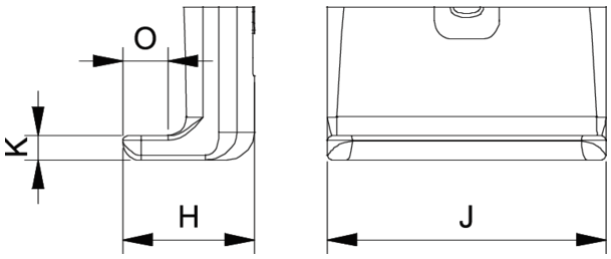

Abbreviation	Attribut	Wert
X	Total width [mm]	330 mm
Y	Total depth [mm]	67 mm
Z	Total height [mm]	337 mm
A	Clamping depth of external puller [mm]	200 mm
S1	Width across flats [mm]	27 mm
S2	Width across flats [mm]	46 mm
Cmin	Span outside pull-off (min.) [mm]	21 mm
Cmax	Span outside pull-off (max.) [mm]	250 mm
K	Hook root thickness at the tip (claw thickness K) [mm]	6,5 mm
J	Hook base width (claw width J) [mm]	35 mm

O	Hook base depth usable (claw depth usable O) [mm]	22 mm
H	Total hook root depth (total claw depth H) [mm]	52 mm
L	Total claw thickness (L+1mm) [mm]: (claw distance to base surface)	6,5 mm
Emin	Span inside pull-out (min.) [mm]	180 mm
Emax	Span inside pull-out (max.) [mm]	340 mm
Tmax	Max. torque [Nm]	250 Nm
Fmax	Max. tractive force [t]	9 t
Fmax	Max. tensile force [kN]	90 kN