30-2+ 3-jaw universal puller with quick adjustment jaws, up to 160 mm spread, 150 mm reach



DESCRIPTION

The 3-jaw universal puller with quickly adjustable jaws is used for pulling bearings, gears, and discs in all common sizes for craft, workshop, and industry. It allows for loosening any component that sits on a shaft and is freely accessible from the outside. Equipped with robust standard jaws and practical hand knobs, the puller all-rounder ensures a particularly safe, user-friendly, and non-destructive disassembly both for external extraction and internal extraction. The 3-jaw design guarantees an even load distribution and thus a particularly secure grip on the part being pulled.

APPLICATION AREA

To detach bearings, gears, and discs in all common sizes for crafts, workshops, and industry.

BENEFIT

- Simple manual release of the jaws using hand knobs (Quick Adjust Technology)
- 3-jaw ensures an even distribution of force and allows for greater pulling forces.
- Application also for eccentric components through freely movable, sliding puller jaws on the crossbar.
- Hexagonal profile on the crossbar for secure counterholding
- Quick-adjustable jaws guarantee immediate adjustment to any spread between 0 mm – 160 mm
- Anti-slip safety (spindle neck) suspension of the claw in the sliding piece (Armlock Technology)
- Secure installation of the spindle with rotatable spindle tip on both smooth surfaces and in centering (Switch Technology)
- Optional convertible from an external puller to an internal puller by reversing the jaws.
- Anti-slip safety (spindle neck) at the spindle head for safe work with the wrench
- Spindle outlet to protect the thread
- Jaws, spindle, and crossbar have a spare part number for easy reordering.
- Pullers are labeled with technical attributes and manufacturer information (label)

OPERATION

- Position the puller jaws externally onto the part to be pulled off
- Slide the claws under the component
- Use the hand knob for manual fastening of the jaws
- Manually pull the spindle for fixation
- Set the hexagon on the spindle head in motion with a ratchet or a wrench until the component is loosened

APPLICATION IMAGE



MASTER DATA

GTIN [GTIN]	4021176731631
Country of origin	DE
Material	Tool steel
Series	30+
Gross weight [kg]	3,8 kg
Package contents	1 piece
Packaging Act	PAPPE PAP 21
Worldwide sales capability	Yes (REACH, RoHS, POP, PROP65, TSCA)

SPARE PARTS

- 2-152-S_3 quick-adjustable standard puller hooks (set)
- 30-2-T_Crossbar
- 621220_Mechanical pressure spindle

3-jaw universal puller with quick adjustment jaws, up to 160 mm spread, 150 mm reach

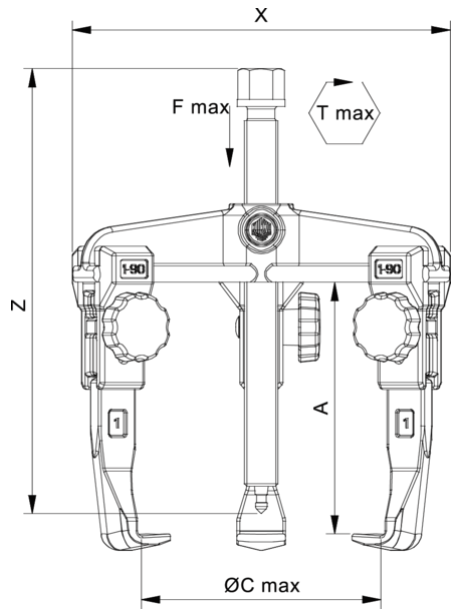

Abbreviation	Attribut	Wert
X	Total width [mm]	216 mm
Y	Total depth [mm]	216 mm
Z	Total height [mm]	254 mm
A	Clamping depth of external puller [mm]	150 mm
S1	Width across flats [mm]	22 mm
Cmin	Span outside pull-off (min.) [mm]	0 mm
Cmax	Span outside pull-off (max.) [mm]	160 mm
K	Hook root thickness at the tip (claw thickness K) [mm]	5 mm
J	Hook base width (claw width J) [mm]	24 mm
O	Hook base depth usable (claw depth usable O) [mm]	18 mm
H	Total hook root depth (total claw depth H) [mm]	40 mm
L	Total claw thickness (L+1mm) [mm]: (claw distance to base surface)	9 mm
Emin	Span inside pull-out (min.) [mm]	100 mm
Emax	Span inside pull-out (max.) [mm]	220 mm
Tmax	Max. torque [Nm]	150 Nm
Fmax	Max. tractive force [t]	7 t
Fmax	Max. tensile force [kN]	70 kN

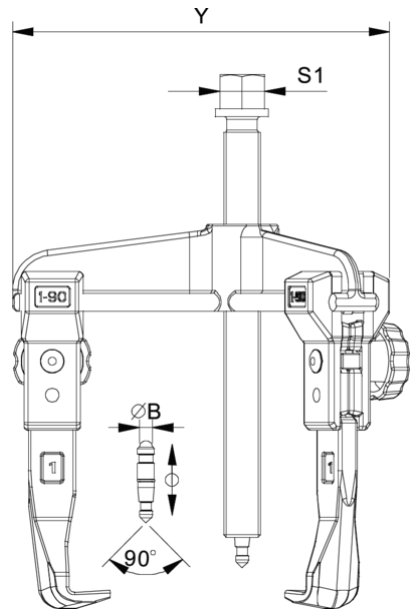

Abbreviation	Attribut	Wert
X	Total width [mm]	216 mm
Y	Total depth [mm]	216 mm
Z	Total height [mm]	254 mm
A	Clamping depth of external puller [mm]	150 mm
S1	Width across flats [mm]	22 mm
Cmin	Span outside pull-off (min.) [mm]	0 mm
Cmax	Span outside pull-off (max.) [mm]	160 mm
K	Hook root thickness at the tip (claw thickness K) [mm]	5 mm
J	Hook base width (claw width J) [mm]	24 mm
O	Hook base depth usable (claw depth usable O) [mm]	18 mm
H	Total hook root depth (total claw depth H) [mm]	40 mm
L	Total claw thickness (L+1mm) [mm]: (claw distance to base surface)	9 mm
Emin	Span inside pull-out (min.) [mm]	100 mm
Emax	Span inside pull-out (max.) [mm]	220 mm
Tmax	Max. torque [Nm]	150 Nm
Fmax	Max. tractive force [t]	7 t
Fmax	Max. tensile force [kN]	70 kN

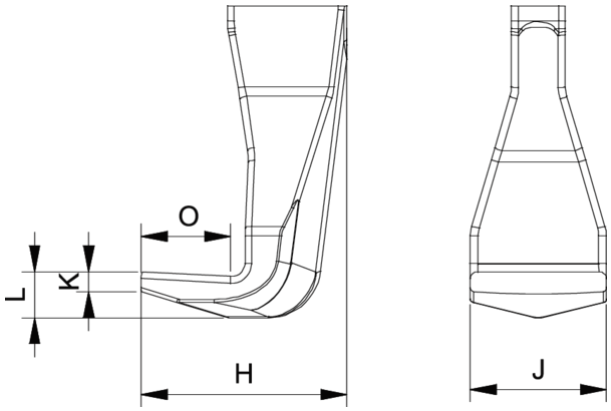

Abbreviation	Attribut	Wert
X	Total width [mm]	216 mm
Y	Total depth [mm]	216 mm
Z	Total height [mm]	254 mm
A	Clamping depth of external puller [mm]	150 mm

S1	Width across flats [mm]	22 mm
Cmin	Span outside pull-off (min.) [mm]	0 mm
Cmax	Span outside pull-off (max.) [mm]	160 mm
K	Hook root thickness at the tip (claw thickness K) [mm]	5 mm
J	Hook base width (claw width J) [mm]	24 mm
O	Hook base depth usable (claw depth usable O) [mm]	18 mm
H	Total hook root depth (total claw depth H) [mm]	40 mm
L	Total claw thickness (L+1mm) [mm]: (claw distance to base surface)	9 mm
Emin	Span inside pull-out (min.) [mm]	100 mm
Emax	Span inside pull-out (max.) [mm]	220 mm
Tmax	Max. torque [Nm]	150 Nm
Fmax	Max. tractive force [t]	7 t
Fmax	Max. tensile force [kN]	70 kN

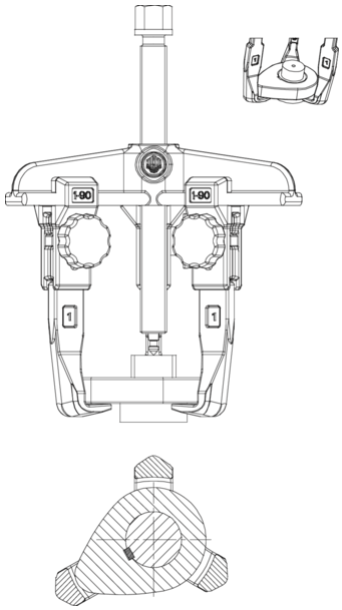

Abbreviation	Attribut	Wert
X	Total width [mm]	216 mm
Y	Total depth [mm]	216 mm
Z	Total height [mm]	254 mm
A	Clamping depth of external puller [mm]	150 mm
S1	Width across flats [mm]	22 mm
Cmin	Span outside pull-off (min.) [mm]	0 mm
Cmax	Span outside pull-off (max.) [mm]	160 mm
K	Hook root thickness at the tip (claw thickness K) [mm]	5 mm
J	Hook base width (claw width J) [mm]	24 mm
O	Hook base depth usable (claw depth usable O) [mm]	18 mm
H	Total hook root depth (total claw depth H) [mm]	40 mm
L	Total claw thickness (L+1mm) [mm]: (claw distance to base surface)	9 mm
Emin	Span inside pull-out (min.) [mm]	100 mm
Emax	Span inside pull-out (max.) [mm]	220 mm
Tmax	Max. torque [Nm]	150 Nm
Fmax	Max. tractive force [t]	7 t
Fmax	Max. tensile force [kN]	70 kN