206-02 3-jaw tab puller with oscillating, height-adjustable jaws, up to 250 mm spread, 220 mm reach



DESCRIPTION

The heavy 3-jaw puller with oscillating and height-adjustable jaws is used for centric extraction of large bearings, gears, and discs in all common sizes for crafts, workshops, and industry. This allows you to remove any component sitting on a shaft that is freely accessible from the outside. The oscillating jaws adapt to any installation situation and are universally applicable due to the adjustable reach. Depending on the design, the shape of the jaws varies. The 3-jaw design guarantees an even load distribution and thus a particularly secure grip on the part being pulled.

APPLICATION AREA

For centralized extraction of large bearings, gears, and discs in all common sizes for craft, workshop, and industry.

BENEFIT

- Adjustable puller jaws for individual adjustment of reach depth
- Puller jaws with different claw shapes for flexible working
- Claw end with slot provides support for screw for additional support when pulling off
- Safe installation of the spindle using a rotatable spindle tip on both smooth surfaces and during centering (Switch Technology)
- 3-jaw ensures an even distribution of force and allows for greater pulling forces.
- Anti-slip safety (spindle neck) at the spindle head for safe working with a wrench.
- Spindle outlet for thread protection

OPERATION

- Place the puller jaws from the outside onto the part to be removed
- Pivot the claws under the component
- Manually pull the spindle to secure it
- Use a ratchet or a ring spanner to turn the hexagon on the spindle head until the component is loosened

APPLICATION IMAGE

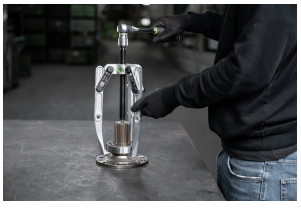

DETAIL IMAGE



MASTER DATA

GTIN [GTIN]	4021176029318
Country of origin	DE
Material	Tool steel
Series	206
Gross weight [kg]	3,36 kg
Package contents	1 piece
Packaging Act	PAPPE PAP 21
Worldwide sales capability	Yes (REACH, RoHS, POP, PROP65, TSCA)

SPARE PARTS

- 202-2-T_Crossbar
- 206-02-220-S_3 puller jaws (set)
- 620260_Two-sided spindle tip
- 621220_Mechanical pressure spindle

3-jaw tab puller with oscillating, height-adjustable jaws, up to 250 mm spread, 220 mm reach

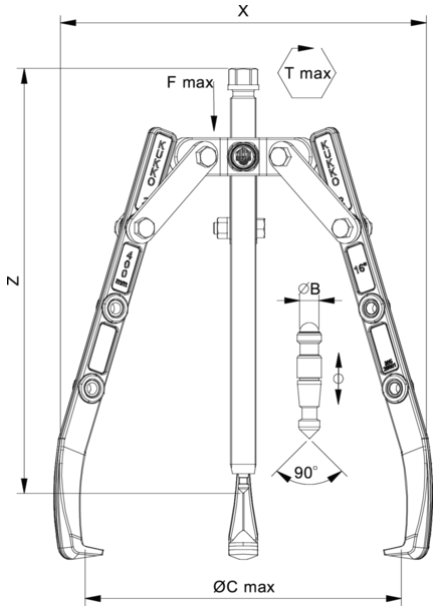

Abbreviation	Attribut	Wert
X	Total width [mm]	320 mm
Y	Total depth [mm]	320 mm
Z	Total height [mm]	245 mm
A	Clamping depth of external puller [mm]	220 mm
S1	Width across flats [mm]	22 mm
Cmin	Span outside pull-off (min.) [mm]	0 mm
Cmax	Span outside pull-off (max.) [mm]	250 mm
K	Hook root thickness at the tip (claw thickness K) [mm]	4 mm
J	Hook base width (claw width J) [mm]	24 mm
O	Hook base depth usable (claw depth usable O) [mm]	15 mm
H	Total hook root depth (total claw depth H) [mm]	50 mm
L	Total claw thickness (L+1mm) [mm]: (claw distance to base surface)	18 mm
Tmax	Max. torque [Nm]	150 Nm
Fmax	Max. tractive force [t]	7 t
Fmax	Max. tensile force [kN]	70 kN

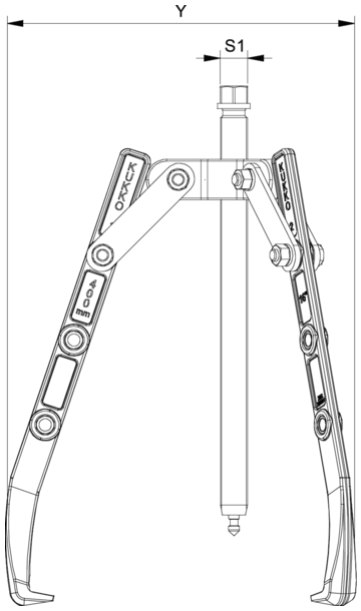

Abbreviation	Attribut	Wert
X	Total width [mm]	320 mm
Y	Total depth [mm]	320 mm
Z	Total height [mm]	245 mm
A	Clamping depth of external puller [mm]	220 mm
S1	Width across flats [mm]	22 mm
Cmin	Span outside pull-off (min.) [mm]	0 mm
Cmax	Span outside pull-off (max.) [mm]	250 mm
K	Hook root thickness at the tip (claw thickness K) [mm]	4 mm
J	Hook base width (claw width J) [mm]	24 mm
O	Hook base depth usable (claw depth usable O) [mm]	15 mm
H	Total hook root depth (total claw depth H) [mm]	50 mm
L	Total claw thickness (L+1mm) [mm]: (claw distance to base surface)	18 mm
Tmax	Max. torque [Nm]	150 Nm
Fmax	Max. tractive force [t]	7 t
Fmax	Max. tensile force [kN]	70 kN

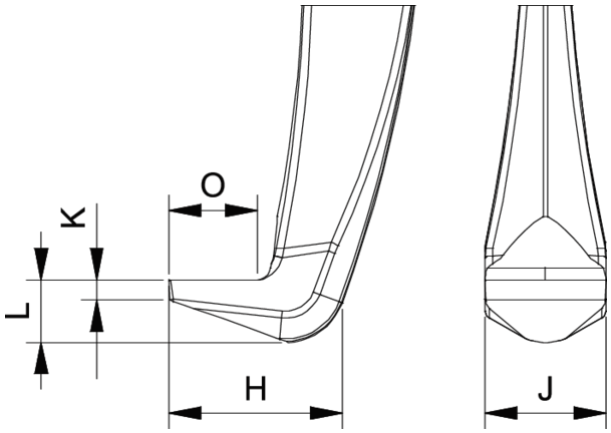

Abbreviation	Attribut	Wert
X	Total width [mm]	320 mm
Y	Total depth [mm]	320 mm
Z	Total height [mm]	245 mm
A	Clamping depth of external puller [mm]	220 mm
S1	Width across flats [mm]	22 mm

Cmin	Span outside pull-off (min.) [mm]	0 mm
Cmax	Span outside pull-off (max.) [mm]	250 mm
K	Hook root thickness at the tip (claw thickness K) [mm]	4 mm
J	Hook base width (claw width J) [mm]	24 mm
O	Hook base depth usable (claw depth usable O) [mm]	15 mm
H	Total hook root depth (total claw depth H) [mm]	50 mm
L	Total claw thickness (L+1mm) [mm]: (claw distance to base surface)	18 mm
Tmax	Max. torque [Nm]	150 Nm
Fmax	Max. tractive force [t]	7 t
Fmax	Max. tensile force [kN]	70 kN

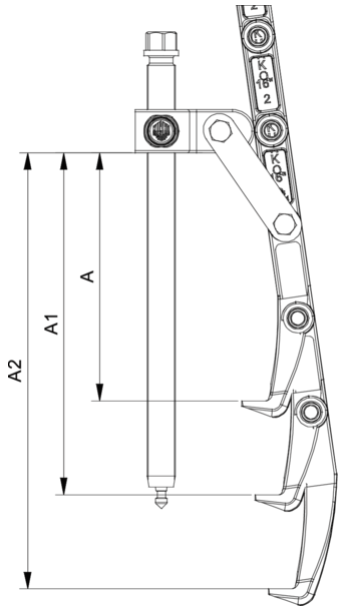

Abbreviation	Attribut	Wert
X	Total width [mm]	320 mm
Y	Total depth [mm]	320 mm
Z	Total height [mm]	245 mm
A	Clamping depth of external puller [mm]	220 mm
S1	Width across flats [mm]	22 mm
Cmin	Span outside pull-off (min.) [mm]	0 mm
Cmax	Span outside pull-off (max.) [mm]	250 mm
K	Hook root thickness at the tip (claw thickness K) [mm]	4 mm
J	Hook base width (claw width J) [mm]	24 mm
O	Hook base depth usable (claw depth usable O) [mm]	15 mm
H	Total hook root depth (total claw depth H) [mm]	50 mm
L	Total claw thickness (L+1mm) [mm]: (claw distance to base surface)	18 mm
Tmax	Max. torque [Nm]	150 Nm
Fmax	Max. tractive force [t]	7 t
Fmax	Max. tensile force [kN]	70 kN