Blok | Mondolfo Ferro TC-20-1230006

Mondolfo Ferro Startline S256 · 2019 · Tekening 6 · positie 6

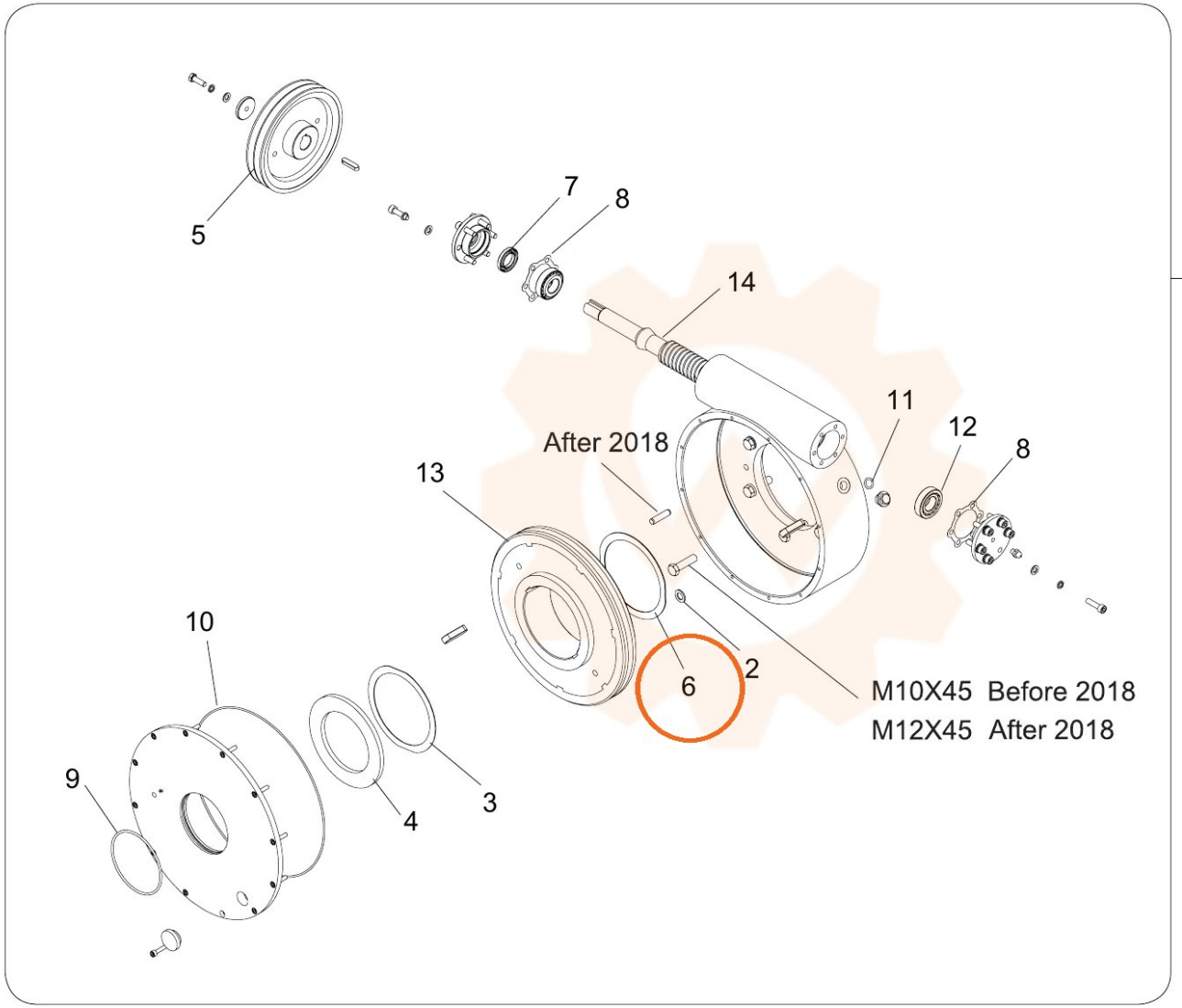
1A Before 2018
1B After 2018
5
7
8
14
11
12
8
After 2018
13
10
6
2
M10X45 Before 2018
M12X45 After 2018
9
4
3