Contactor | Mondolfo Ferro 4-116696

Mondolfo Ferro Titan P232 N - 232 N BC · 2013 · Tekening 5 · positie 11

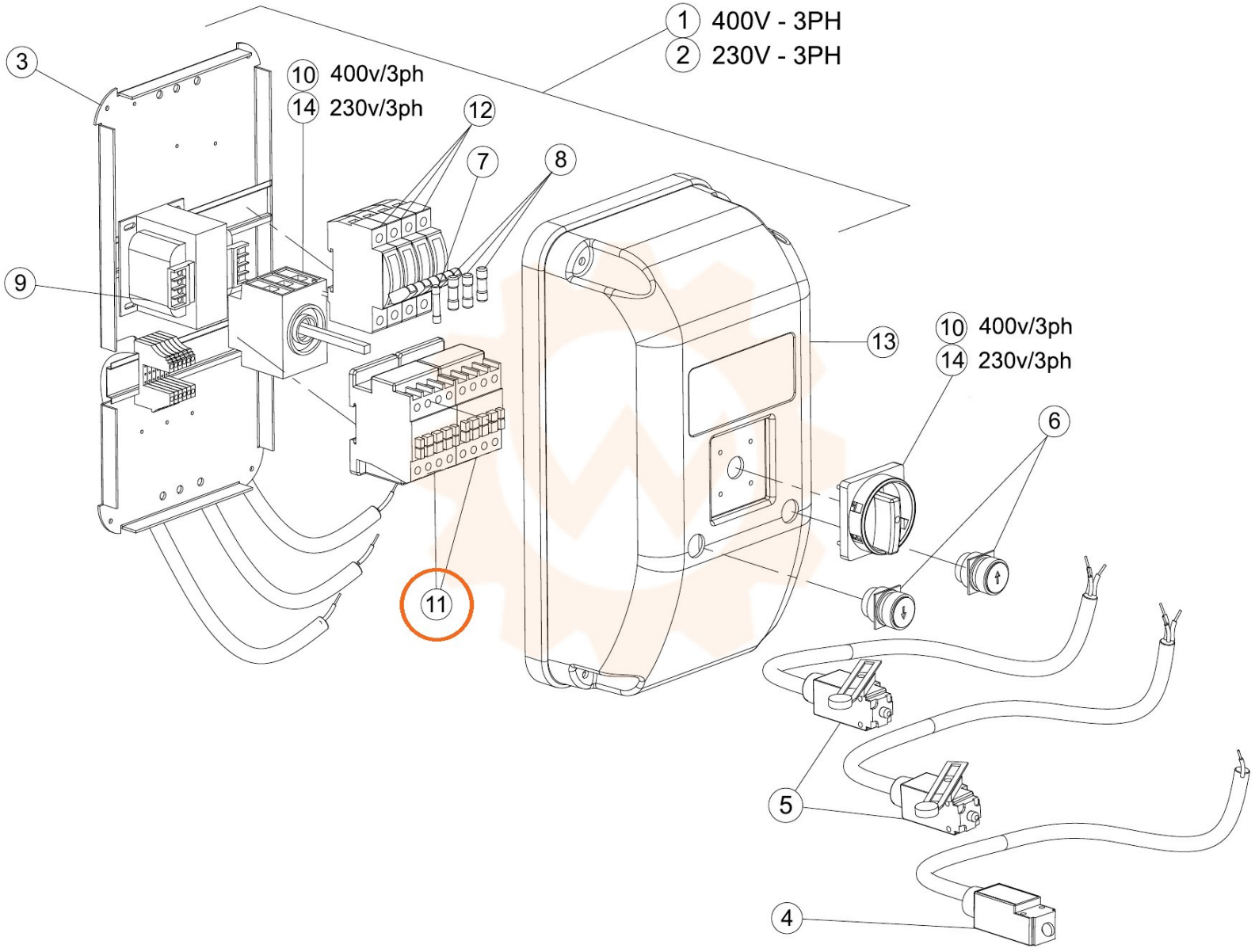
1 400V - 3PH
2 230V - 3PH
3
10 400v/3ph
14 230v/3ph
12
7
8
9
13
10 400v/3ph
14 230v/3ph
6
11
5
4