482-2 2-jaw pullers with force-amplifying, self-centering, clamping jaws, up to 85 mm spread, 90 mm reach



DESCRIPTION

The handy 2-jaw puller with force-amplifying, self-centering and tightening jaws 482-2 is used to pull bearings, gears and discs in confined and difficult-to-access spaces. It can be used to remove any component that is mounted on a shaft and freely accessible from the outside. Thanks to the integrated force amplification with spring mechanism, the jaws are self-retaining, and the clamping force increases in proportion to the pulling force. As the spindle is tightened, the jaws are automatically centered. The freely movable pin on the T-handle guarantees comfortable, one-handed tightening of the spindle in the tightest of spaces.

APPLICATION AREA

To remove bearings, gears, and discs for tight and hard-to-reach spaces.

BENEFIT

- Self-centering of the jaws through manual tightening of the spindle (Autogrip Technology)
- An integrated, free-moving pen at the T-handle ensures manual spindle drive in the tightest spaces.
- The slim design of the jaws allows access to poorly accessible areas.
- The thread design allows for a quick tightening of the spindle, as fewer rotations are required.

OPERATION

- Place the puller jaws from the outside against the part to be removed
- Pivot the claws under the component
- Manually pull the spindle for fixation
- Start the T-handle on the spindle head until the component is released

MASTER DATA

GTIN [GTIN]	4021176479854
Country of origin	DE
Material	Tool steel
Series	482
Gross weight [kg]	0,36 kg
Package contents	1 piece
Packaging Act	PAPPE PAP 21
Worldwide sales capability	Yes (REACH, RoHS, POP, PROP65, TSCA)

SPARE PARTS

- 482-1-T_Crossbar
- 482-2-206_pressure spindle
- 482-2-90-P_2 jaws (pair)

APPLICATION IMAGE

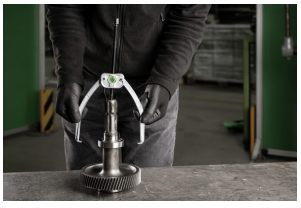

2-jaw pullers with force-amplifying, self-centering, clamping jaws, up to 85 mm spread, 90 mm reach

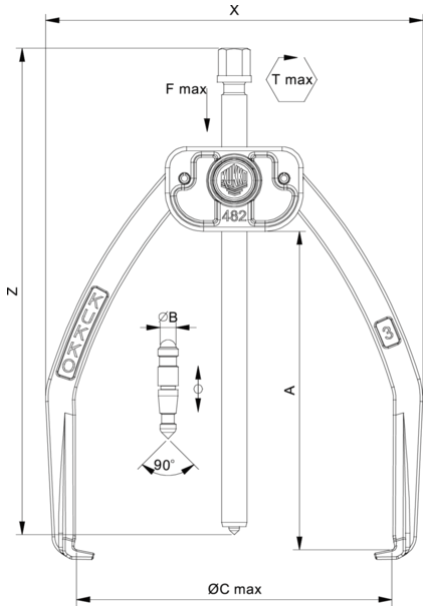

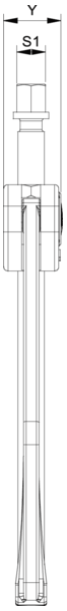

Abbreviation	Attribut	Wert
X	Total width [mm]	105 mm
Y	Total depth [mm]	21 mm
Z	Total height [mm]	150 mm
A	Clamping depth of external puller [mm]	90 mm
S1	Width across flats [mm]	T-handle
Cmin	Span outside pull-off (min.) [mm]	4 mm
Cmax	Span outside pull-off (max.) [mm]	85 mm
K	Hook root thickness at the tip (claw thickness K) [mm]	2,5 mm
J	Hook base width (claw width J) [mm]	8 mm
O	Hook base depth usable (claw depth usable O) [mm]	8 mm
H	Total hook root depth (total claw depth H) [mm]	18 mm
L	Total claw thickness (L+1mm) [mm]: (claw distance to base surface)	5 mm
Fmax	Max. tractive force [t]	1.5 t
Fmax	Max. tensile force [kN]	15 kN

Abbreviation	Attribut	Wert
X	Total width [mm]	105 mm
Y	Total depth [mm]	21 mm
Z	Total height [mm]	150 mm
A	Clamping depth of external puller [mm]	90 mm
S1	Width across flats [mm]	T-handle
Cmin	Span outside pull-off (min.) [mm]	4 mm
Cmax	Span outside pull-off (max.) [mm]	85 mm
K	Hook root thickness at the tip (claw thickness K) [mm]	2,5 mm
J	Hook base width (claw width J) [mm]	8 mm
O	Hook base depth usable (claw depth usable O) [mm]	8 mm
H	Total hook root depth (total claw depth H) [mm]	18 mm
L	Total claw thickness (L+1mm) [mm]: (claw distance to base surface)	5 mm
Fmax	Max. tractive force [t]	1.5 t
Fmax	Max. tensile force [kN]	15 kN

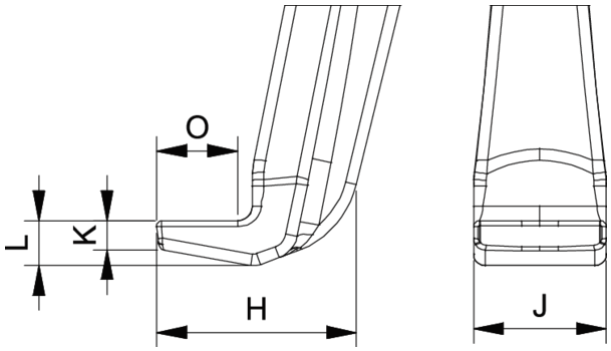

Abbreviation	Attribut	Wert
X	Total width [mm]	105 mm
Y	Total depth [mm]	21 mm
Z	Total height [mm]	150 mm
A	Clamping depth of external puller [mm]	90 mm
S1	Width across flats [mm]	T-handle
Cmin	Span outside pull-off (min.) [mm]	4 mm
Cmax	Span outside pull-off (max.) [mm]	85 mm
K	Hook root thickness at the tip (claw thickness K) [mm]	2,5 mm
J	Hook base width (claw width J) [mm]	8 mm
O	Hook base depth usable (claw depth usable O) [mm]	8 mm

H	Total hook root depth (total claw depth H) [mm]	18 mm
L	Total claw thickness (L+1mm) [mm]: (claw distance to base surface)	5 mm
Fmax	Max. tractive force [t]	1.5 t
Fmax	Max. tensile force [kN]	15 kN