Inbusborgbout M5 x 16 | Mondolfo Ferro 2-02560

Corghi Artiglio Master Code · 2021 · Turntable group (new) · positie 29 (2 keer op deze tekening)

GRUPPO AUTOCENTRANTE (NEW)
TURNTABLE GROUP (NEW)

DALLA MATRICOLA CPF178108 (LUGLIO 2019)
SINCE SERIAL NUMER CPF178108 (JULY 2019)

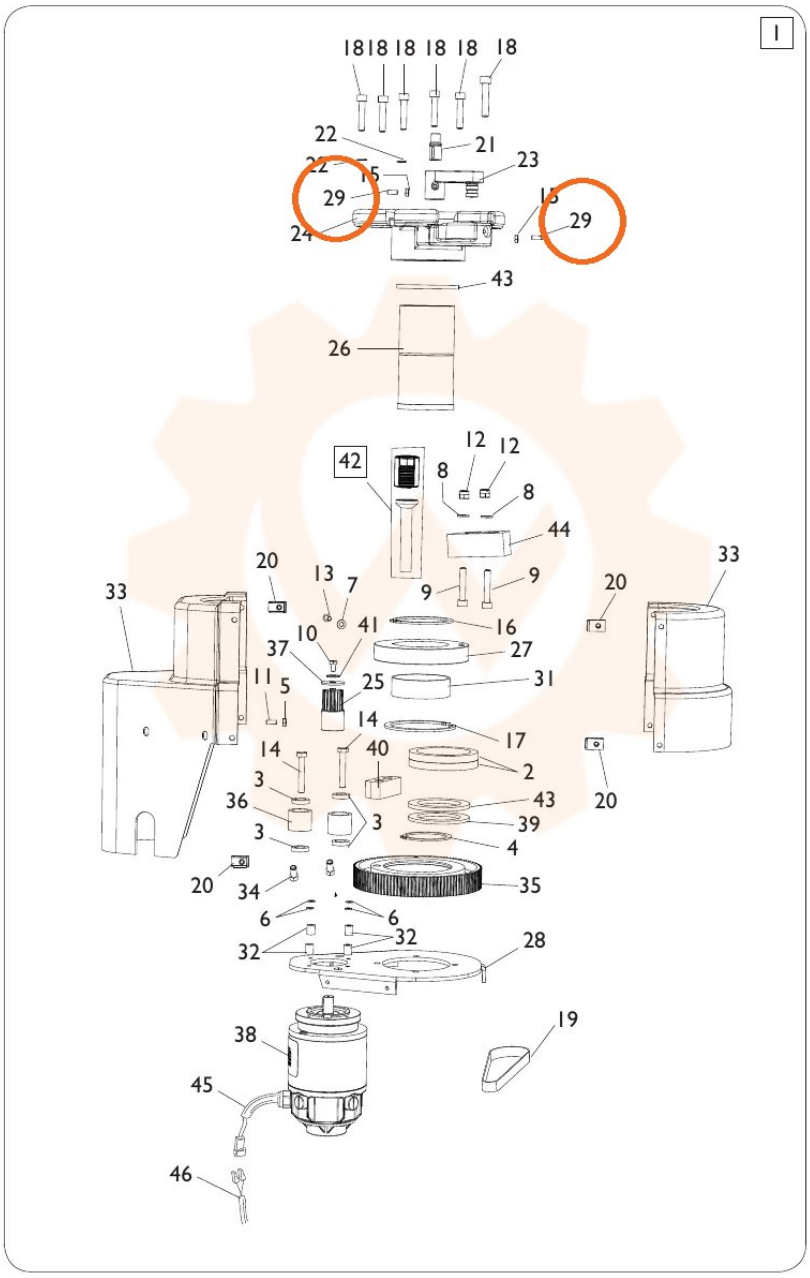

TORNA AL COMPLESSIVO
RETURNS TO OVERALL

Onderdelentekening Mondolfo Ferro · Workshopparts B.V. · workshopparts.nl · artikelnummer 900300