206-2-B 3-jaw tab puller with oscillating, height-adjustable jaws, hydraulic spindle, up to 450 mm spread, 400 mm reach



APPLICATION IMAGE



DESCRIPTION

The heavy, 3-jaw puller with oscillating, height-adjustable puller arms and hydraulic spindle is used for centrically pulling large, especially seized bearings, gears, and discs in all common sizes for craft, industry, and workshop. The hydraulic spindle achieves an average pulling force of up to 12 t. This allows for the loosening of any component that is mounted on a shaft and is freely accessible from the outside. For pulling processes with a pulling force of up to 10 t and/or in confined space conditions, the mechanical spindle can be used. The oscillating puller arms adapt to any installation situation and are universally applicable due to the adjustable reach. Depending on the design, the claw shape differs. The 3-jaw design guarantees even load distribution and thus a particularly safe hold on the part to be pulled.

APPLICATION AREA

For the centralized extraction of large, particularly tightly seated bearings, gears, and discs in all common sizes for crafts, industry, and workshops.

BENEFIT

- Adjustable puller jaws for individual reach adjustment
- Pulling jaws with different claw shapes for flexible working.
- Claw end with slot provides support for screw for additional support when pulling off
- Hydraulic spindle guarantees easy and controlled pulling of particularly tightly seated parts with minimal effort.
- In limited space conditions that require direct access to the component, the mechanical spindle can be used.
- The mechanical spindle features a rotating spindle tip for secure placement on smooth surfaces and during centering.
- Safe setup of the spindle through a swivel spindle tip on both smooth surfaces and during centering (Switch Technology)
- 3-jaw ensures an even distribution of force and allows for greater pulling forces.
- Anti-slip safety (spindle neck) at the spindle head for safe work with wrench.
- Spindle outlet for thread protection

OPERATION

- Position the puller jaws from the outside onto the part to be removed
- Swing the claws under the component
- Engage the hexagon at the spindle head with a ratchet or a combination wrench
- Follow up with the hydraulic spindle until the component is detached

MASTER DATA

GTIN [GTIN]	4021176886126
Country of origin	DE
Material	Tool steel
Series	206-B
Gross weight [kg]	9,42 kg
Package contents	1 piece
Packaging Act	PAPPE PAP 21
Worldwide sales capability	Yes (REACH, RoHS, POP, PROP65, TSCA)

SPARE PARTS

- 202-3-T_Crossbar
- 206-2-400-S_3 puller jaws (set)
- 626400_Hydraulic spindle
- Hydraulic spindle

3-jaw tab puller with oscillating, height-adjustable jaws, hydraulic spindle, up to 450 mm spread, 400 mm reach

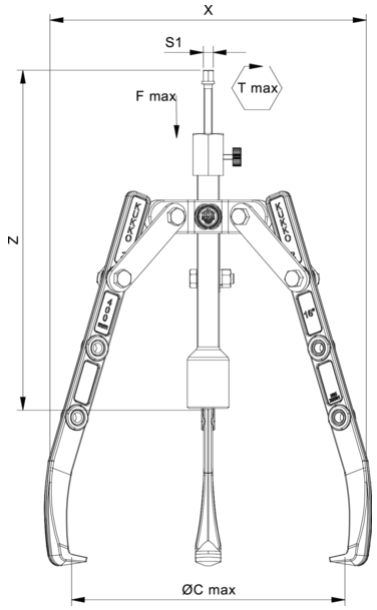

Abbreviation	Attribut	Wert
X	Total width [mm]	496 mm
Y	Total depth [mm]	496 mm
Z	Total height [mm]	480 mm
A	Clamping depth of external puller [mm]	400 mm
S1	Width across flats [mm]	12 mm
Cmin	Span outside pull-off (min.) [mm]	0 mm
Cmax	Span outside pull-off (max.) [mm]	450 mm
A6	Clamping depth of A6 external pull-off (hydraulic) [mm]	350 mm
K	Hook root thickness at the tip (claw thickness K) [mm]	5 mm
J	Hook base width (claw width J) [mm]	30 mm
O	Hook base depth usable (claw depth usable O) [mm]	23 mm
H	Total hook root depth (total claw depth H) [mm]	46 mm
L	Total claw thickness (L+1mm) [mm]: (claw distance to base surface)	20 mm
Tmax	Max. torque [Nm]	20 Nm
Fmax	Max. tractive force [t]	12 t
Fmax	Max. tensile force [kN]	120 kN

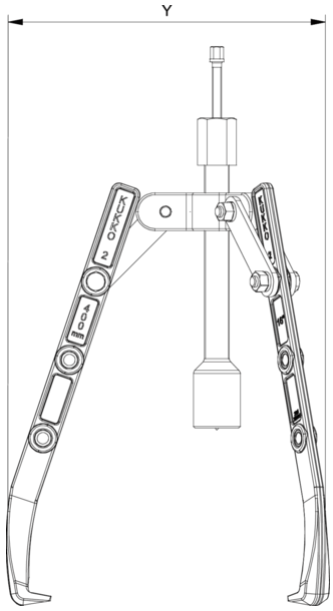

Abbreviation	Attribut	Wert
X	Total width [mm]	496 mm
Y	Total depth [mm]	496 mm
Z	Total height [mm]	480 mm
A	Clamping depth of external puller [mm]	400 mm
S1	Width across flats [mm]	12 mm
Cmin	Span outside pull-off (min.) [mm]	0 mm
Cmax	Span outside pull-off (max.) [mm]	450 mm
A6	Clamping depth of A6 external pull-off (hydraulic) [mm]	350 mm
K	Hook root thickness at the tip (claw thickness K) [mm]	5 mm
J	Hook base width (claw width J) [mm]	30 mm
O	Hook base depth usable (claw depth usable O) [mm]	23 mm
H	Total hook root depth (total claw depth H) [mm]	46 mm
L	Total claw thickness (L+1mm) [mm]: (claw distance to base surface)	20 mm
Tmax	Max. torque [Nm]	20 Nm
Fmax	Max. tractive force [t]	12 t
Fmax	Max. tensile force [kN]	120 kN

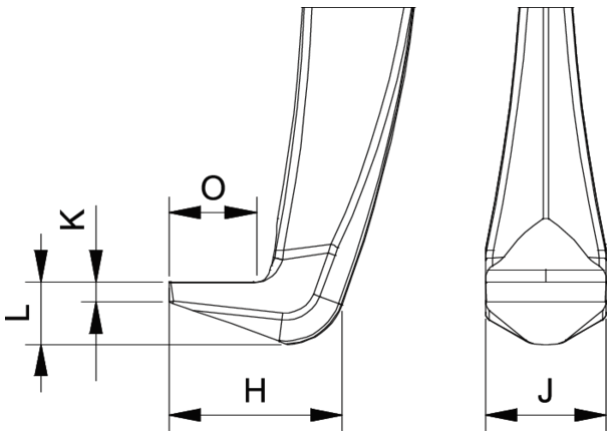

Abbreviation	Attribut	Wert
X	Total width [mm]	496 mm
Y	Total depth [mm]	496 mm
Z	Total height [mm]	480 mm
A	Clamping depth of external puller [mm]	400 mm

S1	Width across flats [mm]	12 mm
Cmin	Span outside pull-off (min.) [mm]	0 mm
Cmax	Span outside pull-off (max.) [mm]	450 mm
A6	Clamping depth of A6 external pull-off (hydraulic) [mm]	350 mm
K	Hook root thickness at the tip (claw thickness K) [mm]	5 mm
J	Hook base width (claw width J) [mm]	30 mm
O	Hook base depth usable (claw depth usable O) [mm]	23 mm
H	Total hook root depth (total claw depth H) [mm]	46 mm
L	Total claw thickness (L+1mm) [mm]: (claw distance to base surface)	20 mm
Tmax	Max. torque [Nm]	20 Nm
Fmax	Max. tractive force [t]	12 t
Fmax	Max. tensile force [kN]	120 kN

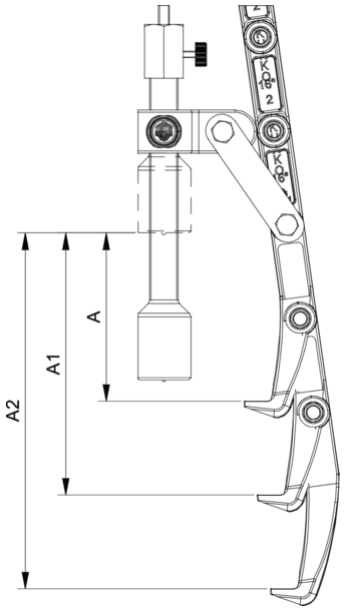

Abbreviation	Attribut	Wert
X	Total width [mm]	496 mm
Y	Total depth [mm]	496 mm
Z	Total height [mm]	480 mm
A	Clamping depth of external puller [mm]	400 mm
S1	Width across flats [mm]	12 mm
Cmin	Span outside pull-off (min.) [mm]	0 mm
Cmax	Span outside pull-off (max.) [mm]	450 mm
A6	Clamping depth of A6 external pull-off (hydraulic) [mm]	350 mm
K	Hook root thickness at the tip (claw thickness K) [mm]	5 mm
J	Hook base width (claw width J) [mm]	30 mm
O	Hook base depth usable (claw depth usable O) [mm]	23 mm
H	Total hook root depth (total claw depth H) [mm]	46 mm
L	Total claw thickness (L+1mm) [mm]: (claw distance to base surface)	20 mm
Tmax	Max. torque [Nm]	20 Nm
Fmax	Max. tractive force [t]	12 t
Fmax	Max. tensile force [kN]	120 kN

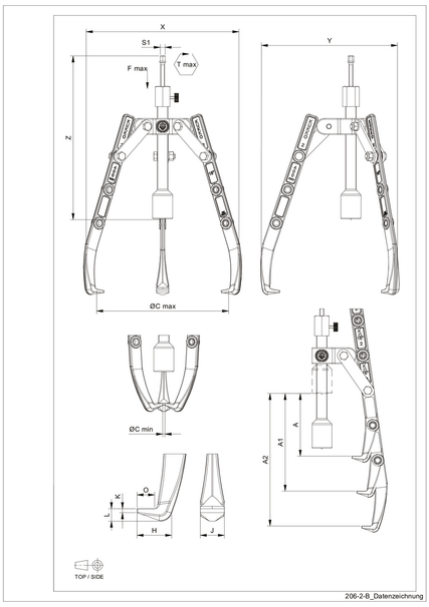

Abbreviation	Attribut	Wert
X	Total width [mm]	496 mm
Y	Total depth [mm]	496 mm
Z	Total height [mm]	480 mm
A	Clamping depth of external puller [mm]	400 mm
S1	Width across flats [mm]	12 mm
Cmin	Span outside pull-off (min.) [mm]	0 mm
Cmax	Span outside pull-off (max.) [mm]	450 mm
A6	Clamping depth of A6 external pull-off (hydraulic) [mm]	350 mm
K	Hook root thickness at the tip (claw thickness K) [mm]	5 mm
J	Hook base width (claw width J) [mm]	30 mm
O	Hook base depth usable (claw depth usable O) [mm]	23 mm
H	Total hook root depth (total claw depth H) [mm]	46 mm
L	Total claw thickness (L+1mm) [mm]: (claw distance to base surface)	20 mm
Tmax	Max. torque [Nm]	20 Nm
Fmax	Max. tractive force [t]	12 t

Fmax	Max. tensile force [kN]	120 kN