Cartridgeklep | Mondolfo Ferro 4-404540

Mondolfo Ferro TBE155 · 2018 UP TO S/N MRD300905K · Tekening 3 · positie 252

VERSIONE PRODOTTA FINO ALLA MATR. MIA216488
VERSION PRODUCED UP TO S/N MIA216488

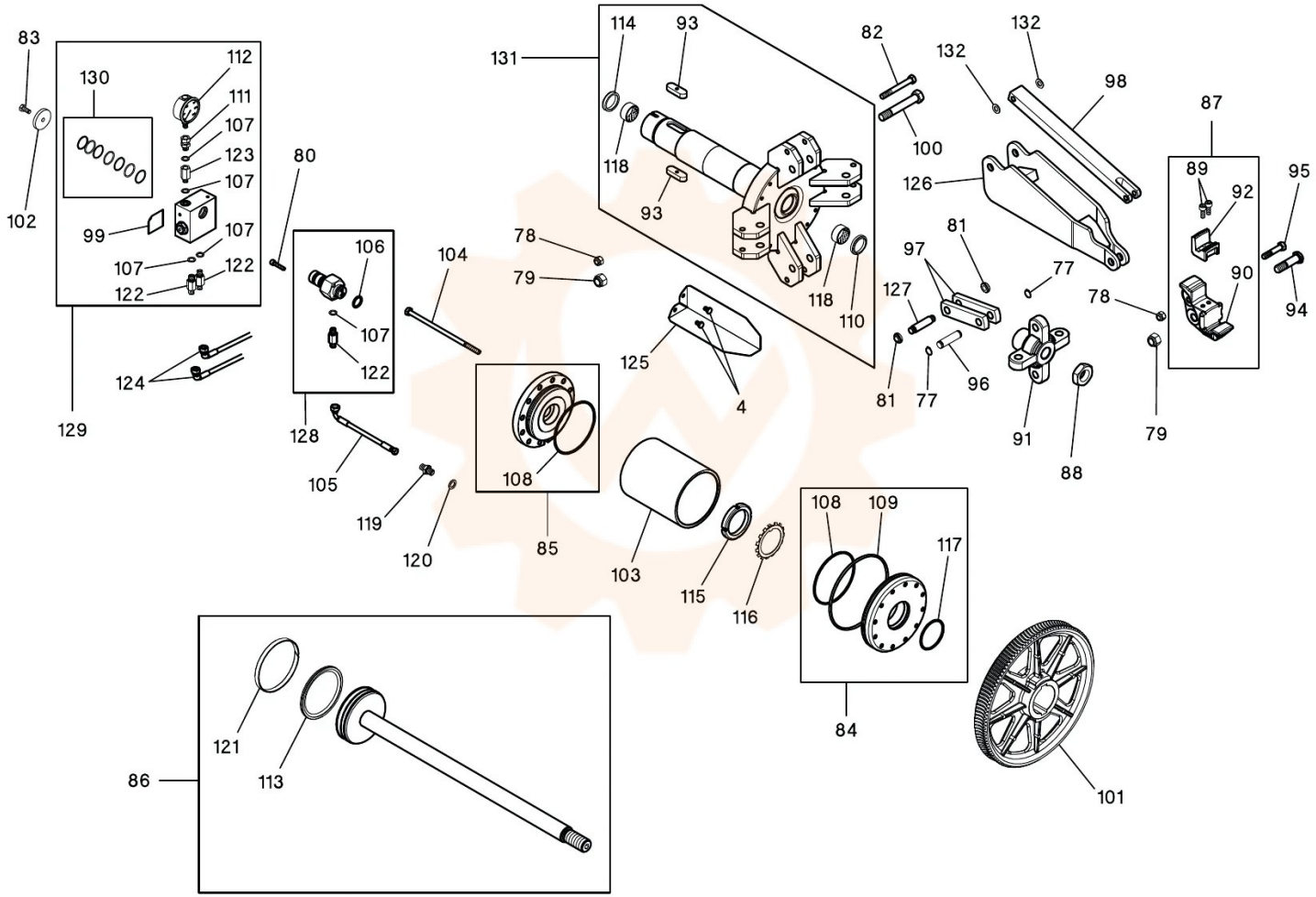

Onderdelentekening Mondolfo Ferro · Workshopparts B.V. · workshopparts.nl · artikelnummer 900478