202-3 3-jaw tab puller with oscillating, reversible jaws, up to 300 mm spread, 260 mm reach



DESCRIPTION

The 3-jaw puller with oscillating and reversible jaws is used for centralized extraction of bearings, gears, and discs in all common sizes for crafts, workshops, and industry. This allows the loosening of any component that sits on a shaft and is freely accessible from the outside. The oscillating jaws with adjustable reach can be applied on both sides. Depending on the design, the claw shape varies. The 3-jawed design ensures even load distribution and a particularly safe grip on the part being extracted.

APPLICATION AREA

For the centric withdrawal of bearings, gears, and disks in all common sizes for trade, workshop, and industry.

BENEFIT

- Adjustable and 180° rotatable puller jaws for individual adjustment of the reach.
- Oscillating puller jaws offer a variety of adjustment options
- Pulling jaws with different claw shapes for flexible working.
- Claw end with slot provides support for screw for additional support when pulling off
- 3-jaw design ensures an even distribution of force and allows for greater pulling forces.
- Secure mounting of the spindle through the rotatable spindle tip on both smooth surfaces and in centering (Switch Technology)
- Anti-slip safety (spindle neck) at the spindle head for safe working with a wrench.
- Spindle outlet for thread protection

OPERATION

- Position the puller jaws from the outside onto the part to be removed
- Swing the jaws under the component
- Manually pull the spindle to fix it in place
- Use a ratchet or a ring spanner to turn the hexagon at the spindle head until the component is loosened

APPLICATION IMAGE

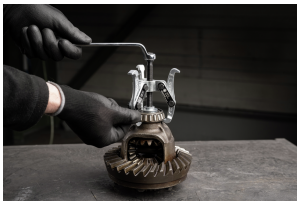

DETAIL IMAGE



MASTER DATA

GTIN [GTIN]	4021176027338
Country of origin	DE
Material	Tool steel
Series	202
Gross weight [kg]	6,775 kg
Package contents	1 piece
Packaging Act	PAPPE PAP 21
Worldwide sales capability	Yes (REACH, RoHS, POP, PROP65, TSCA)

SPARE PARTS

- 202-3-260-S_3 puller set
- 202-3-T_Crossbar
- 626300_Mechanical spindle
- 626300_Mechanical spindle

3-jaw tab puller with oscillating, reversible jaws, up to 300 mm spread, 260 mm reach

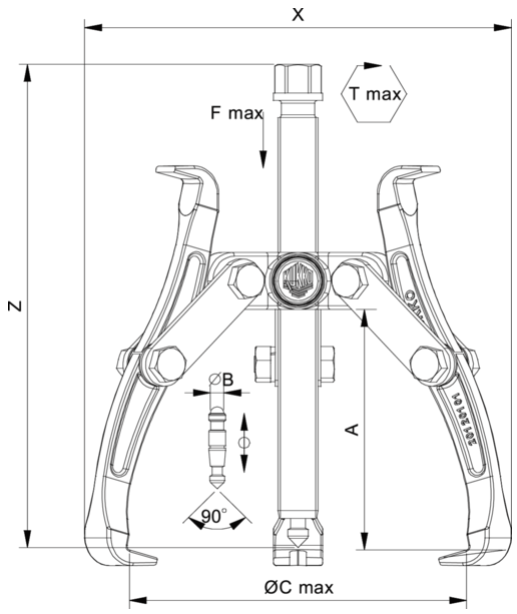

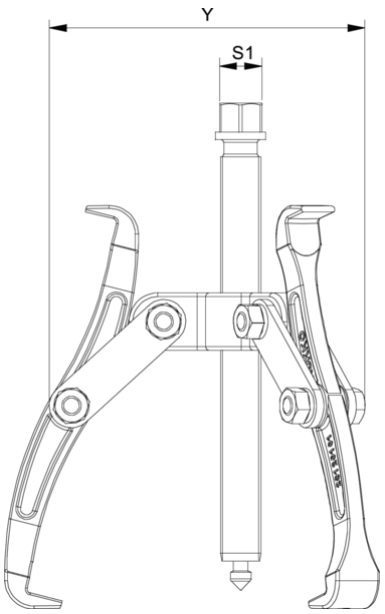

Abbreviation	Attribut	Wert
X	Total width [mm]	330 mm
Y	Total depth [mm]	330 mm
Z	Total height [mm]	330 mm
A	Clamping depth of external puller [mm]	260 mm
S1	Width across flats [mm]	27 mm
Cmin	Span outside pull-off (min.) [mm]	0 mm
Cmax	Span outside pull-off (max.) [mm]	300 mm
K	Hook root thickness at the tip (claw thickness K) [mm]	5 mm
J	Hook base width (claw width J) [mm]	26 mm
O	Hook base depth usable (claw depth usable O) [mm]	20 mm
H	Total hook root depth (total claw depth H) [mm]	35 mm
L	Total claw thickness (L+1mm) [mm]: (claw distance to base surface)	12 mm
Emin	Span inside pull-out (min.) [mm]	112 mm
Tmax	Max. torque [Nm]	250 Nm
Fmax	Max. tractive force [t]	10 t
Fmax	Max. tensile force [kN]	100 kN

Abbreviation	Attribut	Wert
X	Total width [mm]	330 mm
Y	Total depth [mm]	330 mm
Z	Total height [mm]	330 mm
A	Clamping depth of external puller [mm]	260 mm
S1	Width across flats [mm]	27 mm
Cmin	Span outside pull-off (min.) [mm]	0 mm
Cmax	Span outside pull-off (max.) [mm]	300 mm
K	Hook root thickness at the tip (claw thickness K) [mm]	5 mm
J	Hook base width (claw width J) [mm]	26 mm
O	Hook base depth usable (claw depth usable O) [mm]	20 mm
H	Total hook root depth (total claw depth H) [mm]	35 mm
L	Total claw thickness (L+1mm) [mm]: (claw distance to base surface)	12 mm
Emin	Span inside pull-out (min.) [mm]	112 mm
Tmax	Max. torque [Nm]	250 Nm
Fmax	Max. tractive force [t]	10 t
Fmax	Max. tensile force [kN]	100 kN

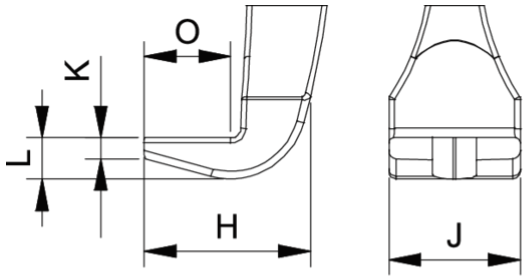

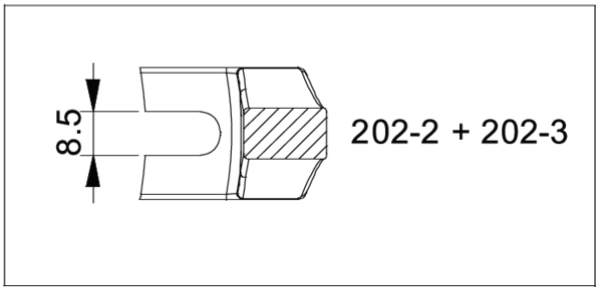

Abbreviation	Attribut	Wert
X	Total width [mm]	330 mm
Y	Total depth [mm]	330 mm
Z	Total height [mm]	330 mm
A	Clamping depth of external puller [mm]	260 mm
S1	Width across flats [mm]	27 mm
Cmin	Span outside pull-off (min.) [mm]	0 mm
Cmax	Span outside pull-off (max.) [mm]	300 mm
K	Hook root thickness at the tip (claw thickness K) [mm]	5 mm
J	Hook base width (claw width J) [mm]	26 mm
O	Hook base depth usable (claw depth usable O) [mm]	20 mm
H	Total hook root depth (total claw depth H) [mm]	35 mm
L	Total claw thickness (L+1mm) [mm]: (claw distance to base surface)	12 mm
Emin	Span inside pull-out (min.) [mm]	112 mm
Tmax	Max. torque [Nm]	250 Nm
Fmax	Max. tractive force [t]	10 t
Fmax	Max. tensile force [kN]	100 kN

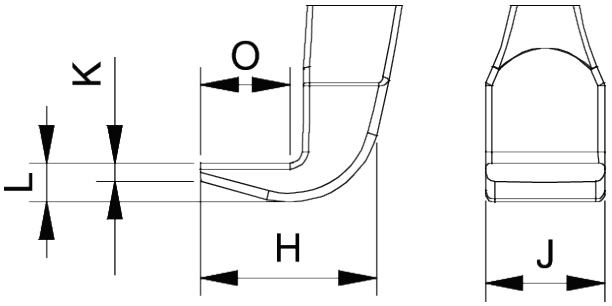

Abbreviation	Attribut	Wert
X	Total width [mm]	330 mm
Y	Total depth [mm]	330 mm
Z	Total height [mm]	330 mm
A	Clamping depth of external puller [mm]	260 mm
S1	Width across flats [mm]	27 mm
Cmin	Span outside pull-off (min.) [mm]	0 mm
Cmax	Span outside pull-off (max.) [mm]	300 mm
K	Hook root thickness at the tip (claw thickness K) [mm]	5 mm
J	Hook base width (claw width J) [mm]	26 mm
O	Hook base depth usable (claw depth usable O) [mm]	20 mm
H	Total hook root depth (total claw depth H) [mm]	35 mm
L	Total claw thickness (L+1mm) [mm]: (claw distance to base surface)	12 mm
Emin	Span inside pull-out (min.) [mm]	112 mm
Tmax	Max. torque [Nm]	250 Nm
Fmax	Max. tractive force [t]	10 t
Fmax	Max. tensile force [kN]	100 kN