Bescherming omschakelaars | Mondolfo Ferro 3311195

Mondolfo Ferro AS924A · 2025 · Tekening 12 · positie 14

VERSIONE DV
2 SPEED VERSION

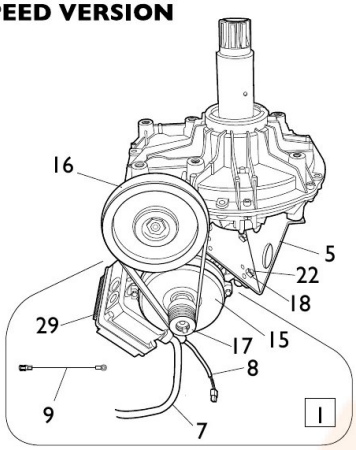

VERSIONE PNEUMATICA
PNEUMATIC VERSION

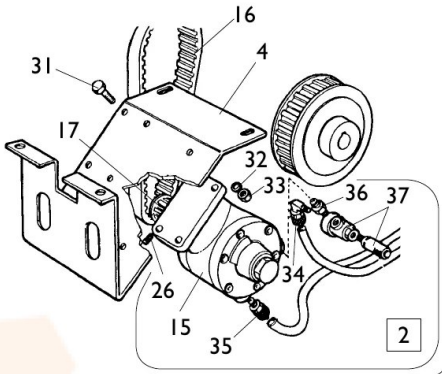

VERSIONE CCSAUS
CCSAUS VERSION

SOLO X CANADA
ONLY FOR CANADA

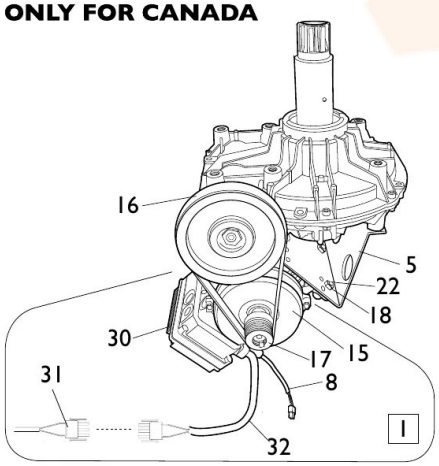

VERSIONE 1ph / 3ph / 3ph 2v
1ph / 3ph / 3ph 2 speed VERSION

