CILINDRO SOLL. BR. MOBILE
LIFTING CYLINDER MOBILE ARM

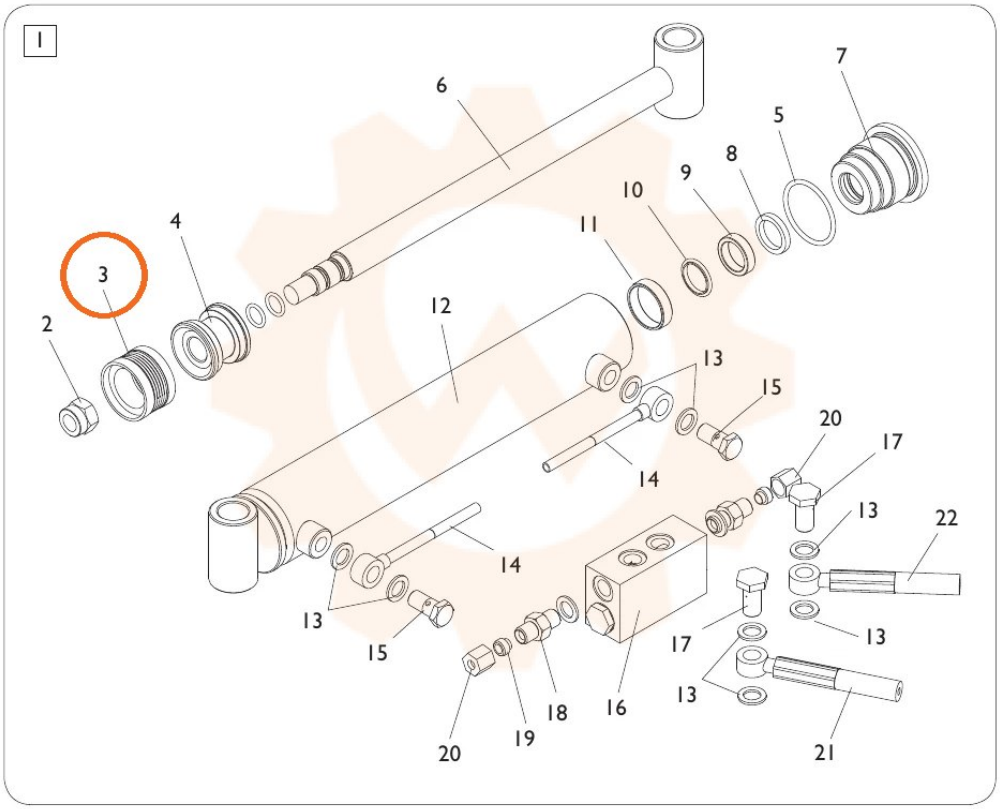

TORNA AL COMPLESSIVO
RETURNS TO OVERALL