14-1 2-jaw puller with self-centering, crossing jaws, up to 100 mm spread, 85 mm reach



DESCRIPTION

The 2-jaw puller with self-gripping, intersecting puller arms is used for extracting sprockets, pulleys, bearings, and similar components in tight spaces. Self-locking retaining pins ensure quick and easy adjustment for variable spread ranges. The puller is self-gripping and simple to handle. During the pulling process, the scissor-like arm guidance firmly presses the claws against the part to be pulled. This provides a secure hold at all times.

APPLICATION AREA

To remove sprockets, pulleys, bearings, and similar components for tight spaces.

BENEFIT

- Fast and easy assembly of the jaws
- Extremely high spread range due to variable mounting of the jaws
- Span width and span depth can be individually adjusted.
- In confined spaces, the two jaws can be mounted first and then fixed in the second step with a crossbar and retaining pins.
- Self-locking stop pins that do not fall out while working thanks to ball retention.
- Puller jaws can be flipped, thereby increasing their spread range many times over.

OPERATION

- Place the puller jaws from the outside onto the part to be removed
- Use a ratchet or a socket wrench to turn the hexagon on the spindle head until the component is loosened

MASTER DATA

GTIN [GTIN]	4021176455421
Country of origin	DE
Material	Tool steel
Series	14
Gross weight [kg]	0,475 kg
Package contents	1 piece
Packaging Act	PAPPE PAP 21
Worldwide sales capability	Yes (REACH, RoHS, POP, PROP65, TSCA)

APPLICATION IMAGE



SPARE PARTS

- 060704_Pair of dowel pins
- 14-1-85-P_2 jaws (pair)
- 14-1-T_Crossbar
- 612130_Mechanical pressure spindle

2-jaw puller with self-centering, crossing jaws, up to 100 mm spread, 85 mm reach

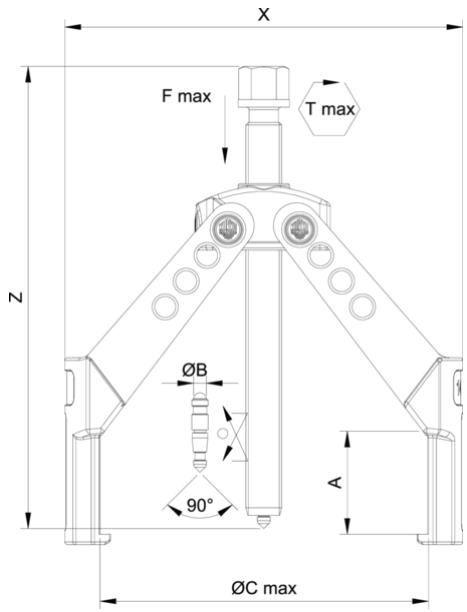

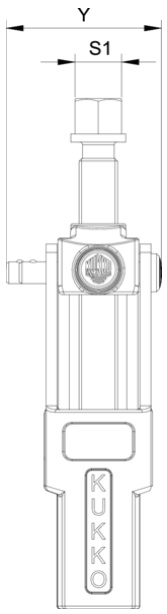

Abbreviation	Attribut	Wert
X	Total width [mm]	109 mm
Y	Total depth [mm]	45 mm
Z	Total height [mm]	150 mm
A	Clamping depth of external puller [mm]	85 mm
S1	Width across flats [mm]	13 mm
Cmin	Span outside pull-off (min.) [mm]	0 mm
Cmax	Span outside pull-off (max.) [mm]	100 mm
K	Hook root thickness at the tip (claw thickness K) [mm]	2,5 mm
J	Hook base width (claw width J) [mm]	21 mm
O	Hook base depth usable (claw depth usable O) [mm]	4 mm
H	Total hook root depth (total claw depth H) [mm]	8,5 mm
L	Total claw thickness (L+1mm) [mm]: (claw distance to base surface)	2,5 mm
Tmax	Max. torque [Nm]	50 Nm
Fmax	Max. tractive force [t]	2.5 t
Fmax	Max. tensile force [kN]	25 kN

Abbreviation	Attribut	Wert
X	Total width [mm]	109 mm
Y	Total depth [mm]	45 mm
Z	Total height [mm]	150 mm
A	Clamping depth of external puller [mm]	85 mm
S1	Width across flats [mm]	13 mm
Cmin	Span outside pull-off (min.) [mm]	0 mm
Cmax	Span outside pull-off (max.) [mm]	100 mm
K	Hook root thickness at the tip (claw thickness K) [mm]	2,5 mm
J	Hook base width (claw width J) [mm]	21 mm
O	Hook base depth usable (claw depth usable O) [mm]	4 mm
H	Total hook root depth (total claw depth H) [mm]	8,5 mm
L	Total claw thickness (L+1mm) [mm]: (claw distance to base surface)	2,5 mm
Tmax	Max. torque [Nm]	50 Nm
Fmax	Max. tractive force [t]	2.5 t
Fmax	Max. tensile force [kN]	25 kN

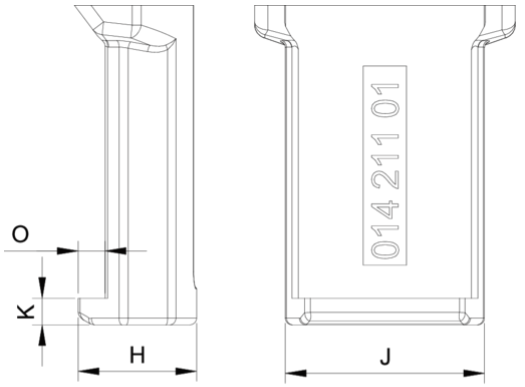

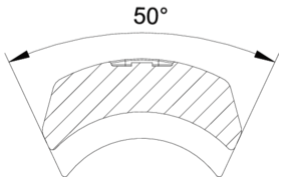

Abbreviation	Attribut	Wert
X	Total width [mm]	109 mm
Y	Total depth [mm]	45 mm
Z	Total height [mm]	150 mm
A	Clamping depth of external puller [mm]	85 mm
S1	Width across flats [mm]	13 mm
Cmin	Span outside pull-off (min.) [mm]	0 mm
Cmax	Span outside pull-off (max.) [mm]	100 mm
K	Hook root thickness at the tip (claw thickness K) [mm]	2,5 mm
J	Hook base width (claw width J) [mm]	21 mm
O	Hook base depth usable (claw depth usable O) [mm]	4 mm
H	Total hook root depth (total claw depth H) [mm]	8,5 mm
L	Total claw thickness (L+1mm) [mm]: (claw distance to base surface)	2,5 mm
Tmax	Max. torque [Nm]	50 Nm
Fmax	Max. tractive force [t]	2.5 t
Fmax	Max. tensile force [kN]	25 kN