11-0-AV 3-jaw universal puller with adjustable reach, up to 375 mm spread, reach from 500 mm to 450 mm



APPLICATION IMAGE



DESCRIPTION

The extra robust 3-jaw universal puller with adjustable reach is used for removing heavy bearings, gears, and discs in all common sizes for craft, workshop, and industry. It allows for loosening any component that sits on a shaft and is freely accessible from the outside. The solid construction of the puller adapts to any pulling situation with its individually adjustable spread and reach, guaranteeing powerful, damage-free disassembly both for external extraction and internal extraction. The 3-jaw design ensures even weight distribution and thus a particularly secure grip on the part to be pulled.

APPLICATION AREA

For removing heavy bearings, gears, and discs in all common sizes for crafts, workshops, and industry.

BENEFIT

- The screw connection allows easy loosening and particularly tight fastening of the jaws with an allen key.
- 3-jaw provides an even distribution of force and allows for greater pulling forces.
- Application also for eccentric components via freely movable, sliding jaws on the traverse.
- Variable adjustment to any spread between 37 mm – 375 mm and reach depth between 500 mm – 450 mm
- Safe setup of the spindle by means of a rotatable spindle tip on both smooth surfaces and when centering (Switch Technology)
- Optional convertible from an external puller to an internal extractor by reversing the jaws.
- Anti-slip safety (spindle neck) at the spindle head for safe working with a wrench.
- Spindle outlet for thread protection

OPERATION

- Place the puller jaws from the outside onto the part to be removed
- Slide the jaws under the component
- Use a wrench to secure the jaws
- Manually pull the spindle for fixation
- Set the hexagon on the spindle head in motion with a ratchet or a ring spanner until the component is released

MASTER DATA

GTIN [GTIN]	4021176730078
Country of origin	DE
Material	Tool steel
Series	11-AV
Gross weight [kg]	23,1 kg
Package contents	1 piece
Packaging Act	PAPPE PAP 21
Worldwide sales capability	Yes (REACH, RoHS, POP, PROP65, TSCA)

SPARE PARTS

- 11-0-20_socket, complete
- 11-0-206_spindle
- 11-0-T_3-jaw crossbar
- 4-SP-S_3 adjustable puller jaws
- 633370_Double-sided spindle tip
- 633400_Mechanical pressure spindle

3-jaw universal puller with adjustable reach, up to 375 mm spread, reach from 500 mm to 450 mm

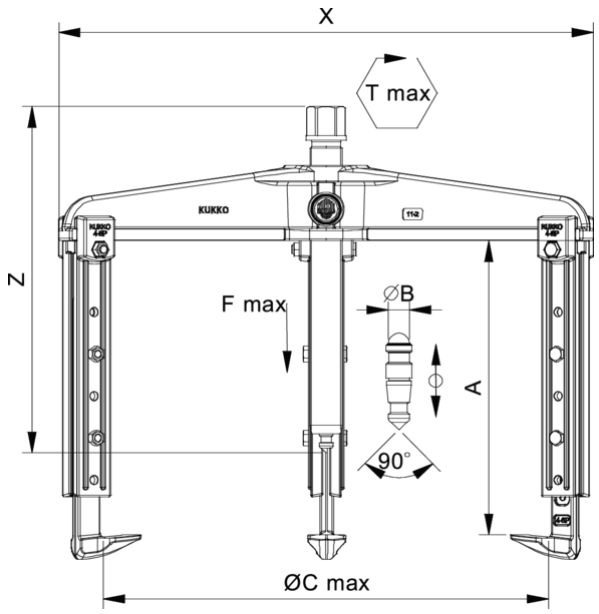

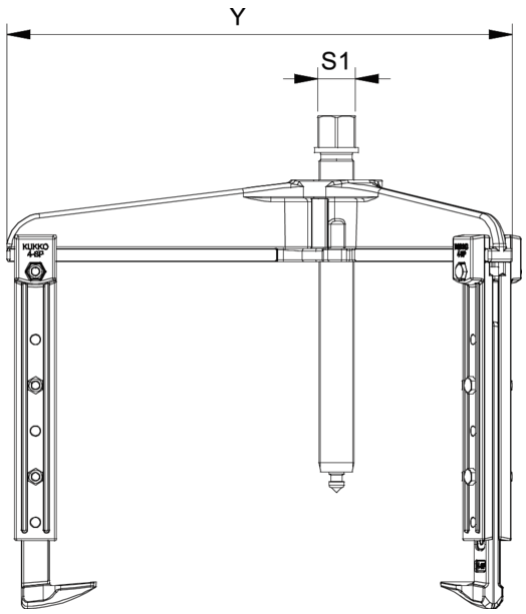

Abbreviation	Attribut	Wert
X	Total width [mm]	490 mm
Y	Total depth [mm]	490 mm
Z	Total height [mm]	451 mm
A	Clamping depth of external puller [mm]	500 mm
S1	Width across flats [mm]	36 mm
Cmin	Span outside pull-off (min.) [mm]	37 mm
Cmax	Span outside pull-off (max.) [mm]	375 mm
A1	Clamping depth of external pull-off A1 [mm]	350 mm
A2	Clamping depth outside pull-off A2 [mm]	400 mm
A3	Clamping depth external pull-off A3 [mm]	450 mm
K	Hook root thickness at the tip (claw thickness K) [mm]	9,5 mm
J	Hook base width (claw width J) [mm]	45 mm
O	Hook base depth usable (claw depth usable O) [mm]	66,5 mm
H	Total hook root depth (total claw depth H) [mm]	82 mm
L	Total claw thickness (L+1mm) [mm]: (claw distance to base surface)	25 mm
Emin	Span inside pull-out (min.) [mm]	220 mm
Emax	Span inside pull-out (max.) [mm]	500 mm
Tmax	Max. torque [Nm]	500 Nm
Fmax	Max. tractive force [t]	15 t
Fmax	Max. tensile force [kN]	150 kN

Abbreviation	Attribut	Wert
X	Total width [mm]	490 mm
Y	Total depth [mm]	490 mm
Z	Total height [mm]	451 mm
A	Clamping depth of external puller [mm]	500 mm
S1	Width across flats [mm]	36 mm
Cmin	Span outside pull-off (min.) [mm]	37 mm
Cmax	Span outside pull-off (max.) [mm]	375 mm
A1	Clamping depth of external pull-off A1 [mm]	350 mm
A2	Clamping depth outside pull-off A2 [mm]	400 mm
A3	Clamping depth external pull-off A3 [mm]	450 mm
K	Hook root thickness at the tip (claw thickness K) [mm]	9,5 mm
J	Hook base width (claw width J) [mm]	45 mm
O	Hook base depth usable (claw depth usable O) [mm]	66,5 mm
H	Total hook root depth (total claw depth H) [mm]	82 mm
L	Total claw thickness (L+1mm) [mm]: (claw distance to base surface)	25 mm
Emin	Span inside pull-out (min.) [mm]	220 mm
Emax	Span inside pull-out (max.) [mm]	500 mm
Tmax	Max. torque [Nm]	500 Nm
Fmax	Max. tractive force [t]	15 t
Fmax	Max. tensile force [kN]	150 kN

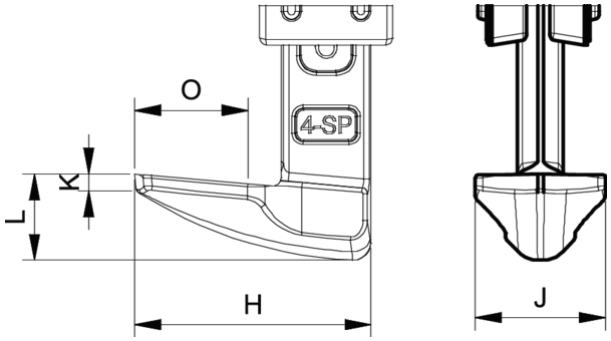

Abbreviation	Attribut	Wert
X	Total width [mm]	490 mm
Y	Total depth [mm]	490 mm
Z	Total height [mm]	451 mm
A	Clamping depth of external puller [mm]	500 mm

S1	Width across flats [mm]	36 mm
Cmin	Span outside pull-off (min.) [mm]	37 mm
Cmax	Span outside pull-off (max.) [mm]	375 mm
A1	Clamping depth of external pull-off A1 [mm]	350 mm
A2	Clamping depth outside pull-off A2 [mm]	400 mm
A3	Clamping depth external pull-off A3 [mm]	450 mm
K	Hook root thickness at the tip (claw thickness K) [mm]	9,5 mm
J	Hook base width (claw width J) [mm]	45 mm
O	Hook base depth usable (claw depth usable O) [mm]	66,5 mm
H	Total hook root depth (total claw depth H) [mm]	82 mm
L	Total claw thickness (L+1mm) [mm]: (claw distance to base surface)	25 mm
Emin	Span inside pull-out (min.) [mm]	220 mm
Emax	Span inside pull-out (max.) [mm]	500 mm
Tmax	Max. torque [Nm]	500 Nm
Fmax	Max. tractive force [t]	15 t
Fmax	Max. tensile force [kN]	150 kN

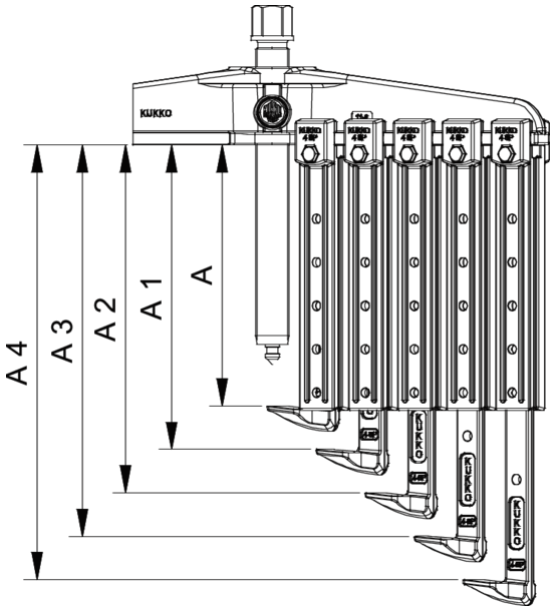

Abbreviation	Attribut	Wert
X	Total width [mm]	490 mm
Y	Total depth [mm]	490 mm
Z	Total height [mm]	451 mm
A	Clamping depth of external puller [mm]	500 mm
S1	Width across flats [mm]	36 mm
Cmin	Span outside pull-off (min.) [mm]	37 mm
Cmax	Span outside pull-off (max.) [mm]	375 mm
A1	Clamping depth of external pull-off A1 [mm]	350 mm
A2	Clamping depth outside pull-off A2 [mm]	400 mm
A3	Clamping depth external pull-off A3 [mm]	450 mm
K	Hook root thickness at the tip (claw thickness K) [mm]	9,5 mm
J	Hook base width (claw width J) [mm]	45 mm
O	Hook base depth usable (claw depth usable O) [mm]	66,5 mm
H	Total hook root depth (total claw depth H) [mm]	82 mm
L	Total claw thickness (L+1mm) [mm]: (claw distance to base surface)	25 mm
Emin	Span inside pull-out (min.) [mm]	220 mm
Emax	Span inside pull-out (max.) [mm]	500 mm
Tmax	Max. torque [Nm]	500 Nm
Fmax	Max. tractive force [t]	15 t
Fmax	Max. tensile force [kN]	150 kN

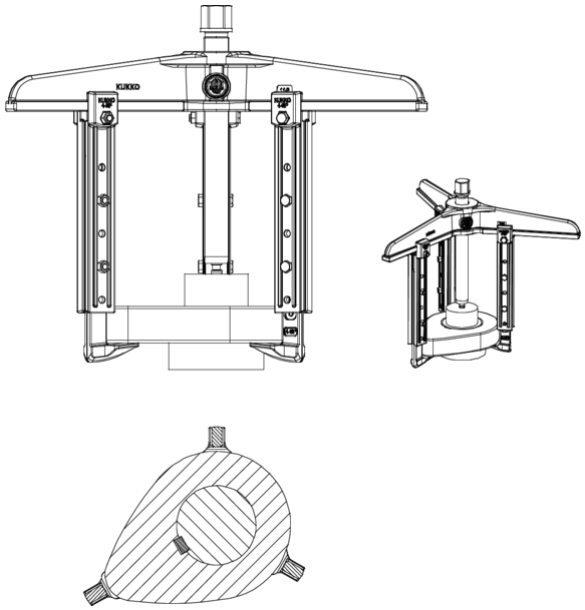

Abbreviation	Attribut	Wert
X	Total width [mm]	490 mm
Y	Total depth [mm]	490 mm
Z	Total height [mm]	451 mm
A	Clamping depth of external puller [mm]	500 mm
S1	Width across flats [mm]	36 mm
Cmin	Span outside pull-off (min.) [mm]	37 mm
Cmax	Span outside pull-off (max.) [mm]	375 mm
A1	Clamping depth of external pull-off A1 [mm]	350 mm
A2	Clamping depth outside pull-off A2 [mm]	400 mm
A3	Clamping depth external pull-off A3 [mm]	450 mm
K	Hook root thickness at the tip (claw thickness K) [mm]	9,5 mm

J	Hook base width (claw width J) [mm]	45 mm
O	Hook base depth usable (claw depth usable O) [mm]	66,5 mm
H	Total hook root depth (total claw depth H) [mm]	82 mm
L	Total claw thickness (L+1mm) [mm]: (claw distance to base surface)	25 mm
Emin	Span inside pull-out (min.) [mm]	220 mm
Emax	Span inside pull-out (max.) [mm]	500 mm
Tmax	Max. torque [Nm]	500 Nm
Fmax	Max. tractive force [t]	15 t
Fmax	Max. tensile force [kN]	150 kN