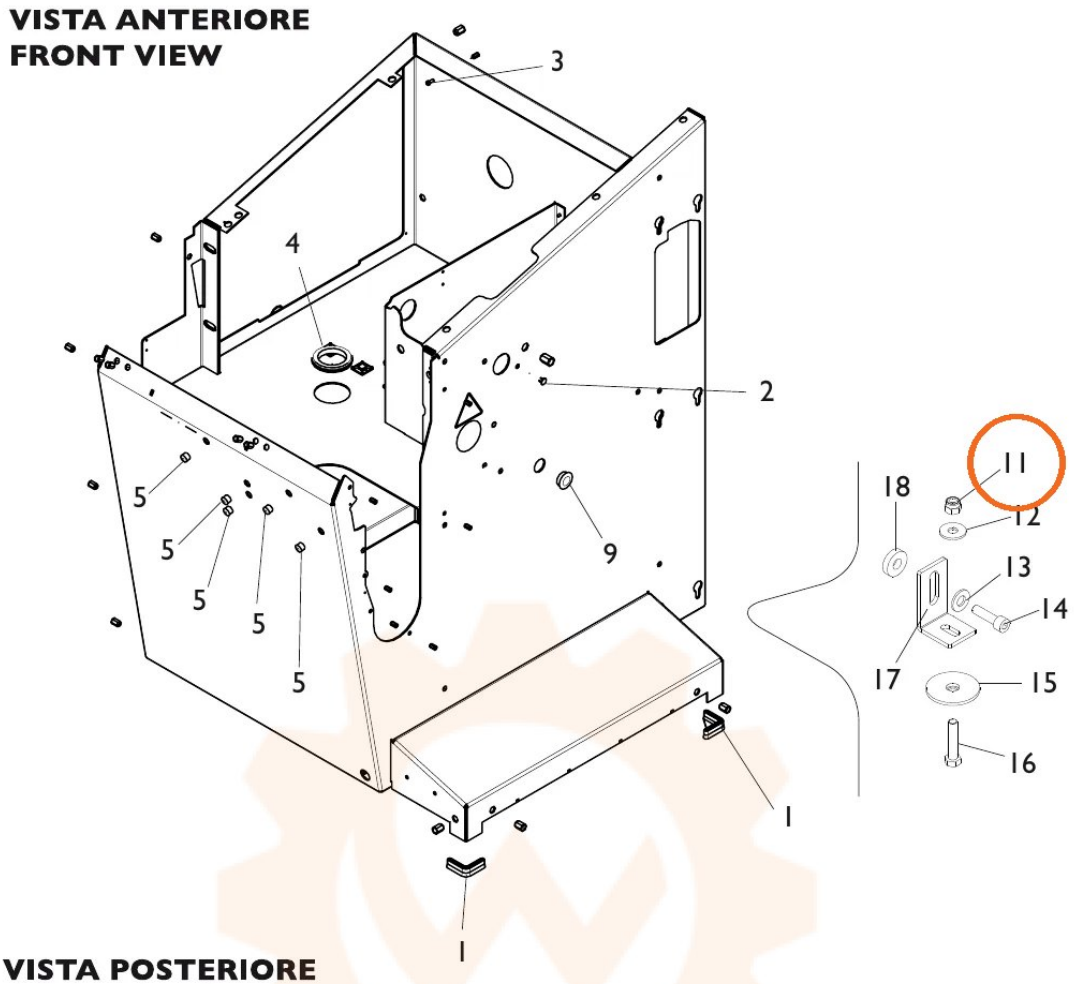
VISTA ANTERIORE
FRONT VIEW
3
4
2
5
5
5
5
5
9
11
18
12
13
14
17
15
16
1
1

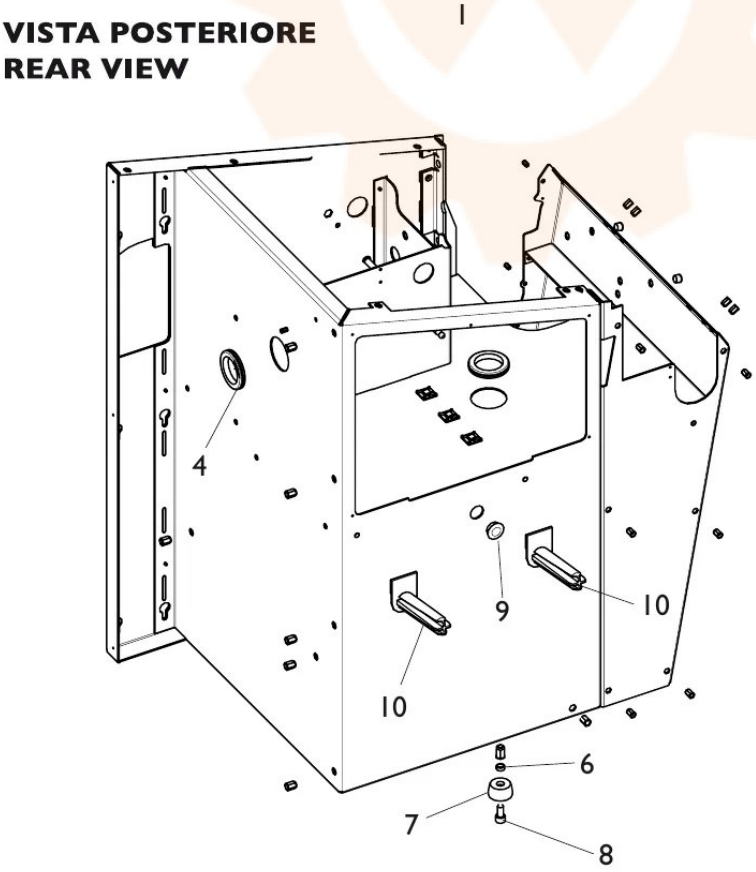
VISTA POSTERIORE
REAR VIEW
4
9
10
10
6
7
8