Kap | Mondolfo Ferro H-80-1000010

Bright 897 · C-97-1520000 · positie 50

C-97-1520000

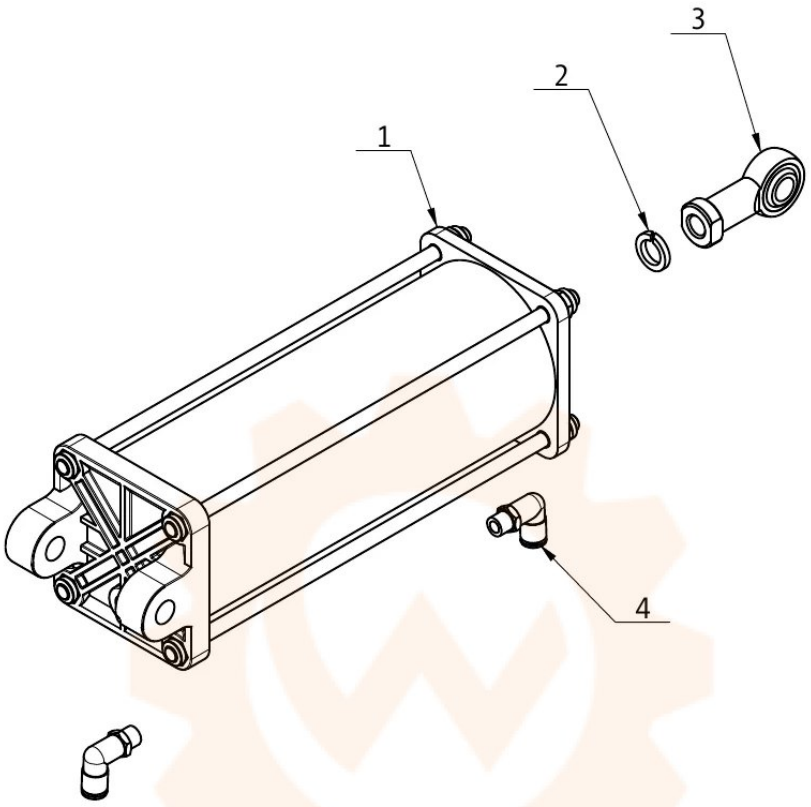

ITEM	PART. No	DESCRIPTION.	QT. Y
1	C-97-1521000	PULL-OUT CYLINDER	1
2	GB93-12	STANDARD SPRING WASHER	1
3	CT-XD-1000007	BEARING JOINTS	1
4	FPL 6-01	MALE ELBOW	2