Perssluitring | Mondolfo Ferro C-54-1300008

Bright 885 · Revision 1?A-01 · positie 6 (2 keer op deze tekening)

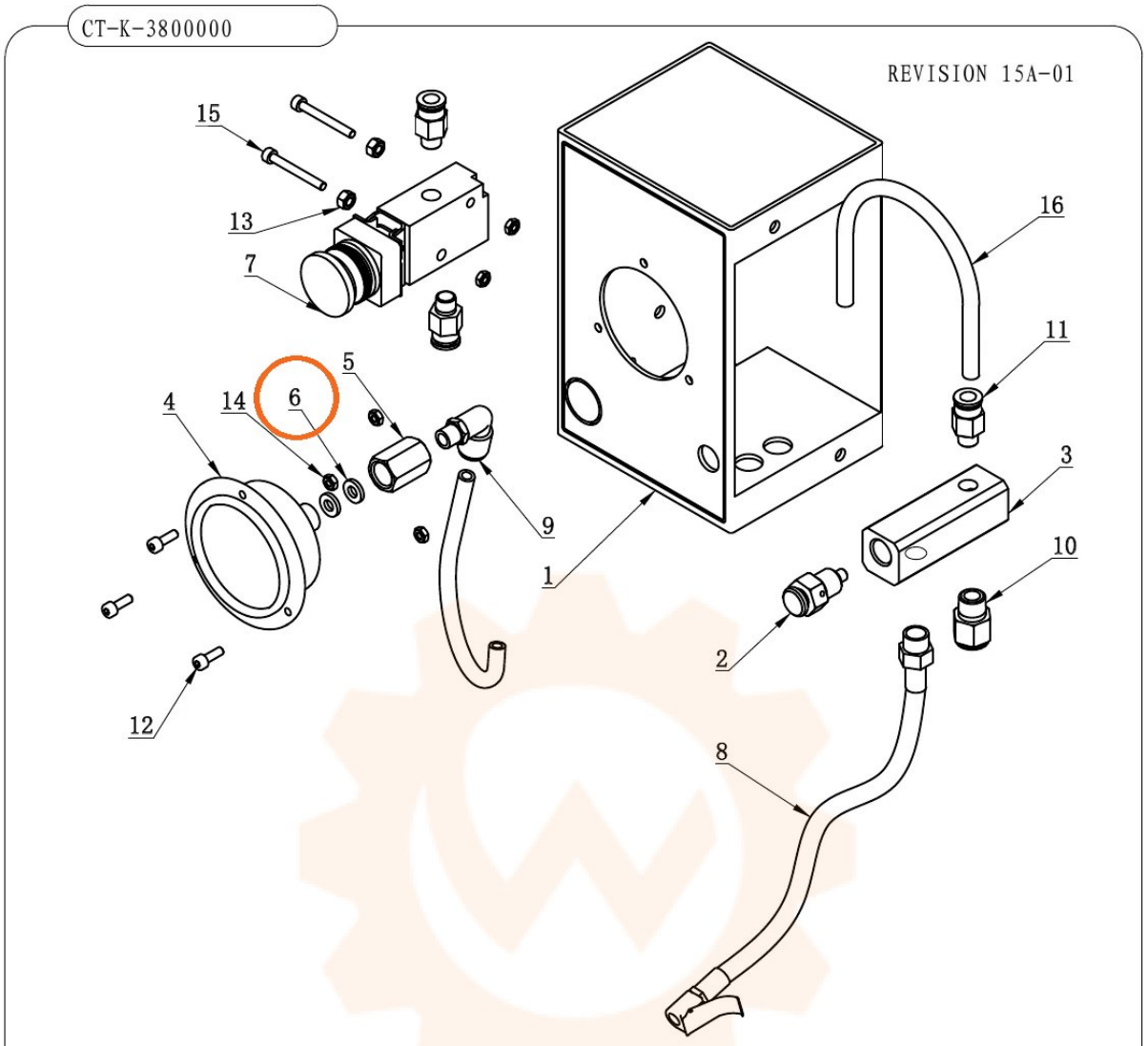

ITEM	PART. No	DESCRIPTION.	QT. Y
1	CT-K-3100001	PRESSURE GAUGE COVER	1
2	CT-K-3110000	EXHAUST VALVE ASSEMBLY	1
3	CT-K-3120000	AIR DISTRIBUTING VALVE	1
4	CT-K-3100004	PRESSURE GAUGE	1
5	CT-K-3100002	CONNECT NUT	1
6	TC-10-1620003	AIR REGULATOR WASHER	2
7	JEL-MSV22-06PB	VALVA	1
8	CT-K-3100003	INFLATING HOSE	1
9	FPL 8-01	INSERT ELBOW Φ8, R1/8	1
10	FPC 8-02	MALE STRAIGHT	1
11	FPC 8-01	MALE STRAIGHT	3
12	GB70.1-M4×12	INNER HEXA CYLINDRICAL SCREW	3
13	GB6170-M5	HEXANGULAR NUT 1-TYPE	2
14	GB6170-M4	HEXANGULAR NUT 1-TYPE	5
15	GB70.1-M4×35	INNER HEXA CYLINDRICAL SCREW	2
16	PU-0800240-Y	PU HOSE Φ8x5	2