Drukknop | Mondolfo Ferro 4-111994

Mondolfo Ferro Titan P 235 · 2013 · Tekening 4 · positie 6

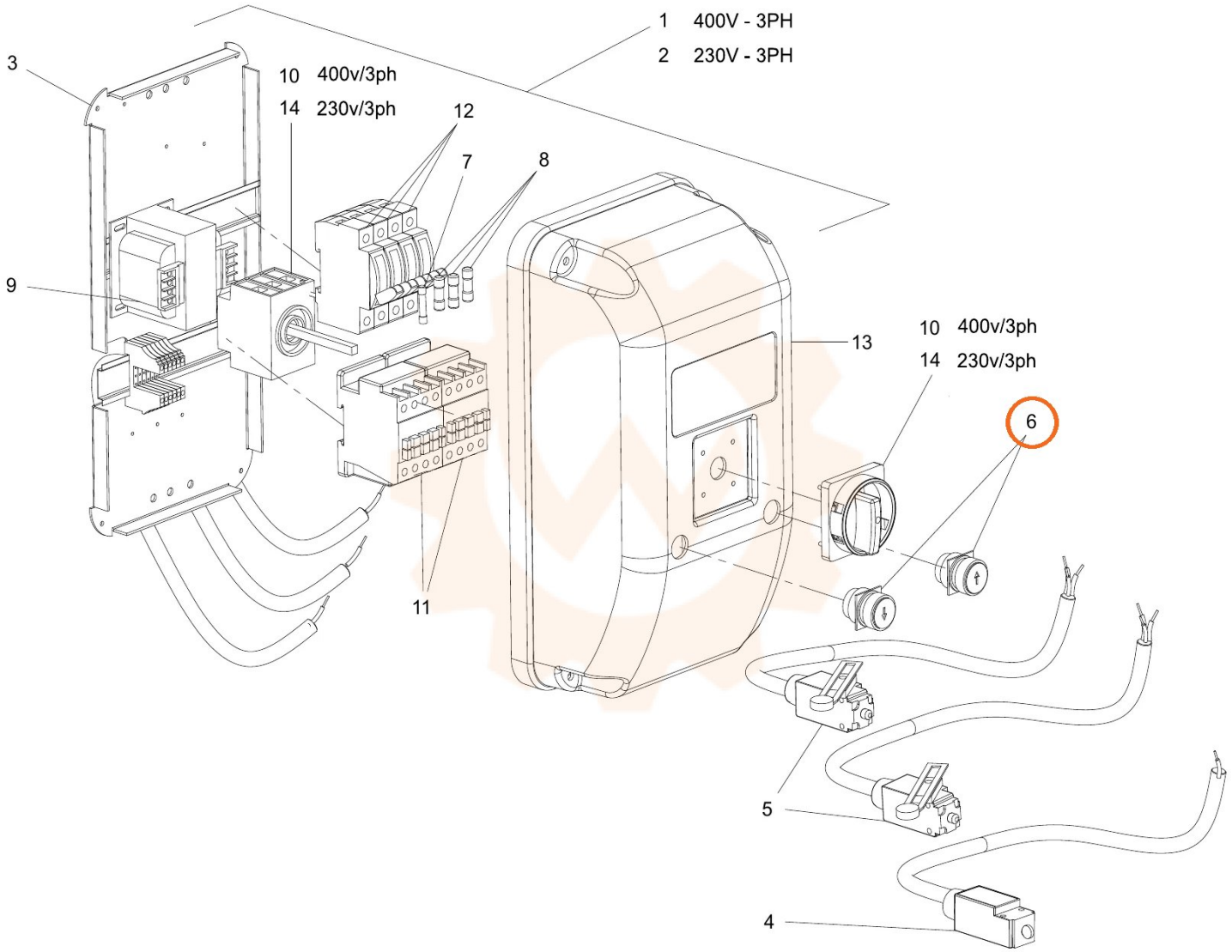
1 400V - 3PH
2 230V - 3PH
3
10 400v/3ph
14 230v/3ph
12
7
8
9
13
10 400v/3ph
14 230v/3ph
6
11
5
4