201-S 2-jaw tab puller for fan wheels with height-adjustable jaws, up to 200 mm spread, 200 mm reach



DESCRIPTION

The 2-jaw puller with oscillating and height-adjustable jaws is used for pulling fan wheels and propellers in all common sizes for crafts, workshops, and industry. Thanks to the particularly slim design, the jaws grip through the two slots and capture the flange of the fan. The oscillating jaws adapt to every installation situation and are universally applicable due to the adjustable reach. In addition, the jaws are 180° rotatable and can be used on both sides, allowing for different claw sizes depending on the space below the part to be pulled.

APPLICATION AREA

To remove fan wheels in all common sizes for crafts, workshops, and industry.

BENEFIT

- Adjustable puller jaws for individual adjustment of the reach due to multiple drilling in the puller jaws
- Jaws are rotatable by 180° and can be used on both sides.
- Puller jaws with varying claw sizes for flexible work
- Secure setup of the spindle with a swiveling spindle tip on both smooth surfaces and during centering (Switch Technology)
- Anti-slip safety (spindle neck) at the spindle head for safe work with wrench.
- Spindle extension for the protection of the thread

OPERATION

- Position the puller jaws from the outside onto the part to be removed
- Swing the jaws under the component
- Manually pull the spindle to fix it in place
- Use a ratchet or a ring spanner to turn the hexagon at the spindle head until the component is loosened

MASTER DATA

GTIN [GTIN]	4021176026911
Country of origin	DE
Material	Tool steel
Series	201-S
Gross weight [kg]	1,16 kg
Package contents	1 piece
Packaging Act	PAPPE PAP 21
Worldwide sales capability	Yes (REACH, RoHS, POP, PROP65, TSCA)

SPARE PARTS

- 201-1-T_Crossbar
- 201-S-P_2 puller jaws (pair)
- 614240_Press spindle
- 614250_Mechanical spindle

APPLICATION IMAGE



DETAIL IMAGE



2-jaw tab puller for fan wheels with height-adjustable jaws, up to 200 mm spread, 200 mm reach

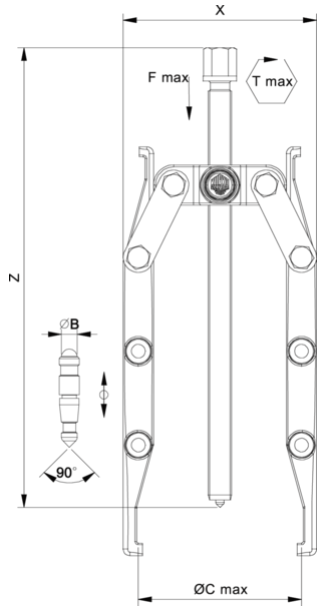

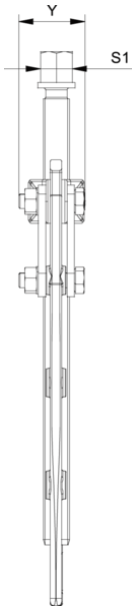

Abbreviation	Attribut	Wert
X	Total width [mm]	210 mm
Y	Total depth [mm]	30 mm
Z	Total height [mm]	275 mm
A	Clamping depth of external puller [mm]	200 mm
S1	Width across flats [mm]	17 mm
Cmin	Span outside pull-off (min.) [mm]	11 mm
Cmax	Span outside pull-off (max.) [mm]	200 mm
K	Hook root thickness at the tip (claw thickness K) [mm]	6 mm
J	Hook base width (claw width J) [mm]	6 mm
O	Hook base depth usable (claw depth usable O) [mm]	3,5 mm
H	Total hook root depth (total claw depth H) [mm]	8,5 mm
L	Total claw thickness (L+1mm) [mm]: (claw distance to base surface)	6 mm
Emin	Span inside pull-out (min.) [mm]	40 mm
Tmax	Max. torque [Nm]	30 Nm
Fmax	Max. tractive force [t]	1.5 t
Fmax	Max. tensile force [kN]	15 kN

Abbreviation	Attribut	Wert
X	Total width [mm]	210 mm
Y	Total depth [mm]	30 mm
Z	Total height [mm]	275 mm
A	Clamping depth of external puller [mm]	200 mm
S1	Width across flats [mm]	17 mm
Cmin	Span outside pull-off (min.) [mm]	11 mm
Cmax	Span outside pull-off (max.) [mm]	200 mm
K	Hook root thickness at the tip (claw thickness K) [mm]	6 mm
J	Hook base width (claw width J) [mm]	6 mm
O	Hook base depth usable (claw depth usable O) [mm]	3,5 mm
H	Total hook root depth (total claw depth H) [mm]	8,5 mm
L	Total claw thickness (L+1mm) [mm]: (claw distance to base surface)	6 mm
Emin	Span inside pull-out (min.) [mm]	40 mm
Tmax	Max. torque [Nm]	30 Nm
Fmax	Max. tractive force [t]	1.5 t
Fmax	Max. tensile force [kN]	15 kN

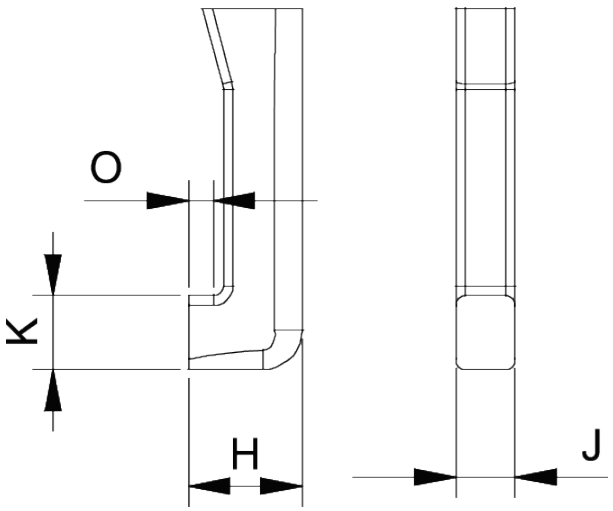

Abbreviation	Attribut	Wert
X	Total width [mm]	210 mm

Y	Total depth [mm]	30 mm
Z	Total height [mm]	275 mm
A	Clamping depth of external puller [mm]	200 mm
S1	Width across flats [mm]	17 mm
Cmin	Span outside pull-off (min.) [mm]	11 mm
Cmax	Span outside pull-off (max.) [mm]	200 mm
K	Hook root thickness at the tip (claw thickness K) [mm]	6 mm
J	Hook base width (claw width J) [mm]	6 mm
O	Hook base depth usable (claw depth usable O) [mm]	3,5 mm
H	Total hook root depth (total claw depth H) [mm]	8,5 mm
L	Total claw thickness (L+1mm) [mm]: (claw distance to base surface)	6 mm
Emin	Span inside pull-out (min.) [mm]	40 mm
Tmax	Max. torque [Nm]	30 Nm
Fmax	Max. tractive force [t]	1.5 t
Fmax	Max. tensile force [kN]	15 kN

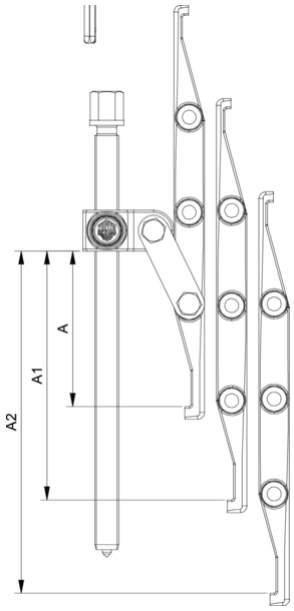

Abbreviation	Attribut	Wert
X	Total width [mm]	210 mm
Y	Total depth [mm]	30 mm
Z	Total height [mm]	275 mm
A	Clamping depth of external puller [mm]	200 mm
S1	Width across flats [mm]	17 mm
Cmin	Span outside pull-off (min.) [mm]	11 mm
Cmax	Span outside pull-off (max.) [mm]	200 mm
K	Hook root thickness at the tip (claw thickness K) [mm]	6 mm
J	Hook base width (claw width J) [mm]	6 mm
O	Hook base depth usable (claw depth usable O) [mm]	3,5 mm
H	Total hook root depth (total claw depth H) [mm]	8,5 mm
L	Total claw thickness (L+1mm) [mm]: (claw distance to base surface)	6 mm
Emin	Span inside pull-out (min.) [mm]	40 mm
Tmax	Max. torque [Nm]	30 Nm
Fmax	Max. tractive force [t]	1.5 t
Fmax	Max. tensile force [kN]	15 kN

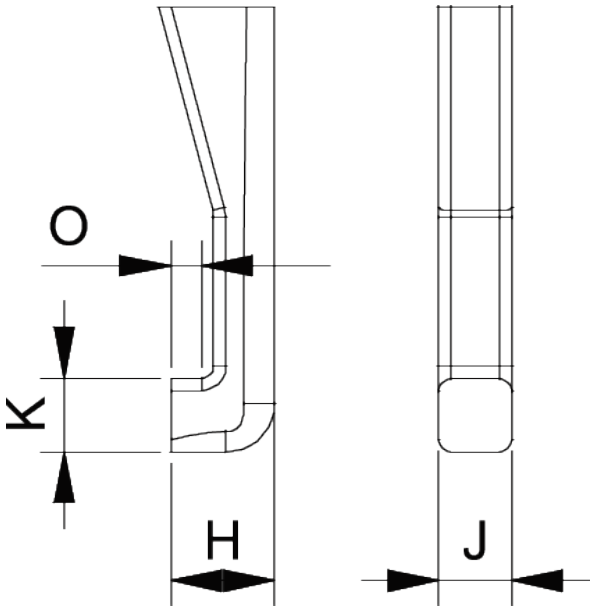

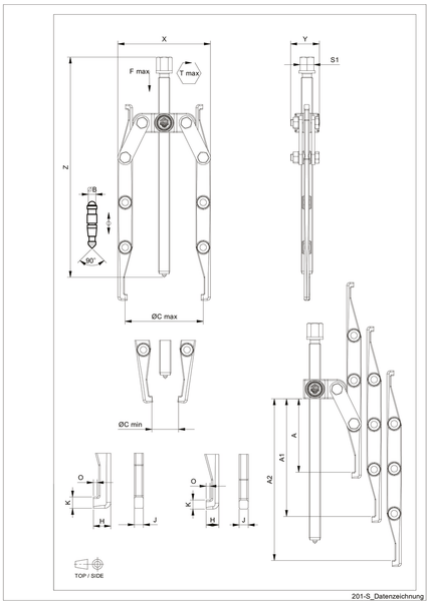

Abbreviation	Attribut	Wert
X	Total width [mm]	210 mm
Y	Total depth [mm]	30 mm
Z	Total height [mm]	275 mm
A	Clamping depth of external puller [mm]	200 mm
S1	Width across flats [mm]	17 mm
Cmin	Span outside pull-off (min.) [mm]	11 mm
Cmax	Span outside pull-off (max.) [mm]	200 mm
K	Hook root thickness at the tip (claw thickness K) [mm]	6 mm
J	Hook base width (claw width J) [mm]	6 mm
O	Hook base depth usable (claw depth usable O) [mm]	3,5 mm
H	Total hook root depth (total claw depth H) [mm]	8,5 mm
L	Total claw thickness (L+1mm) [mm]: (claw distance to base surface)	6 mm
Emin	Span inside pull-out (min.) [mm]	40 mm
Tmax	Max. torque [Nm]	30 Nm
Fmax	Max. tractive force [t]	1.5 t

Abbreviation	Attribut	Wert
X	Total width [mm]	210 mm
Y	Total depth [mm]	30 mm
Z	Total height [mm]	275 mm
A	Clamping depth of external puller [mm]	200 mm
S1	Width across flats [mm]	17 mm
Cmin	Span outside pull-off (min.) [mm]	11 mm
Cmax	Span outside pull-off (max.) [mm]	200 mm
K	Hook root thickness at the tip (claw thickness K) [mm]	6 mm
J	Hook base width (claw width J) [mm]	6 mm
O	Hook base depth usable (claw depth usable O) [mm]	3,5 mm
H	Total hook root depth (total claw depth H) [mm]	8,5 mm
L	Total claw thickness (L+1mm) [mm]: (claw distance to base surface)	6 mm
Emin	Span inside pull-out (min.) [mm]	40 mm
Tmax	Max. torque [Nm]	30 Nm
Fmax	Max. tractive force [t]	1.5 t

Fmax	Max. tensile force [kN]	15 kN

Fmax	Max. tensile force [kN]	15 kN