Borgmoer M6 | Mondolfo Ferro 2-01979

Mondolfo Ferro Aquila AS 905 · 2020 · Tekening 18 · positie 9

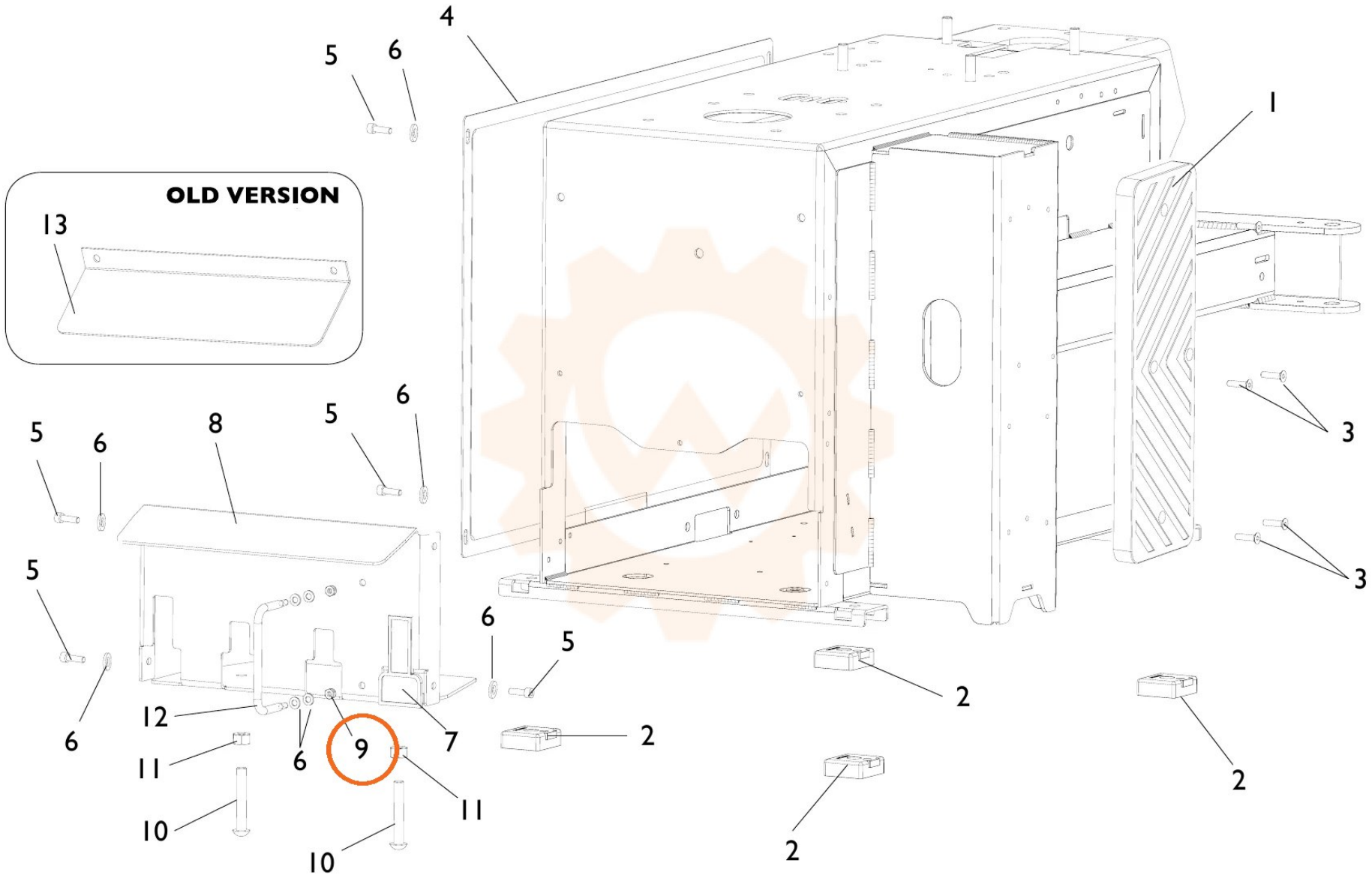
OLD VERSION
13
4
5
6
1
3
8
12
11
10
9
7
2