209-0 3-jaw tab puller with reversible jaws, adjustable reach, up to 100 mm spread, 50 mm reach



DESCRIPTION

The 3-jaw puller with oscillating, reversible jaws and adjustable reach is used for concentrically pulling bearings, gears, and discs in all common sizes for crafts, workshops, and industry. This allows for the removal of any component that is seated on a shaft and is freely accessible from the outside. The jaws are applicable on both sides. Depending on the design, the claw shape differs. The 3-jaw design ensures an even load distribution, thereby providing a particularly secure grip on the part being pulled.

APPLICATION AREA

To detach bearings, gears, and discs in all common sizes for crafts, workshops, and industry.

BENEFIT

- Adjustable and 180° rotatable puller jaws for individual adjustment of the reach depth thanks to multiple drilling.
- Oscillating puller jaws offer a variety of adjustment options
- Puller jaws with different claw shapes for flexible integration
- 3-jaw ensures an even distribution of force and allows for greater pulling forces.
- Spindle outlet for thread protection
- Spindle outlet to protect the thread
- Claw end with slot provides support for screw for additional support during pulling.

OPERATION

- Position the puller jaws from the outside onto the part to be removed
- Swing the jaws under the component
- Manually pull the spindle to fix it in place
- Use a ratchet or a ring spanner to turn the hexagon at the spindle head until the component is loosened

APPLICATION IMAGE



MASTER DATA

GTIN [GTIN]	4021176432323
Country of origin	DE
Material	Tool steel
Series	209
Gross weight [kg]	0,485 kg
Package contents	1 piece
Packaging Act	Rezykkat rHDPE 61
Worldwide sales capability	Yes (REACH, RoHS, POP, PROP65, TSCA)

SPARE PARTS

- 209-0-100-S_3 puller jaws (set)
- 42-0-T_Crossbar
- 610110_Mechanical pressure spindle

3-jaw tab puller with reversible jaws, adjustable reach, up to 100 mm spread, 50 mm reach

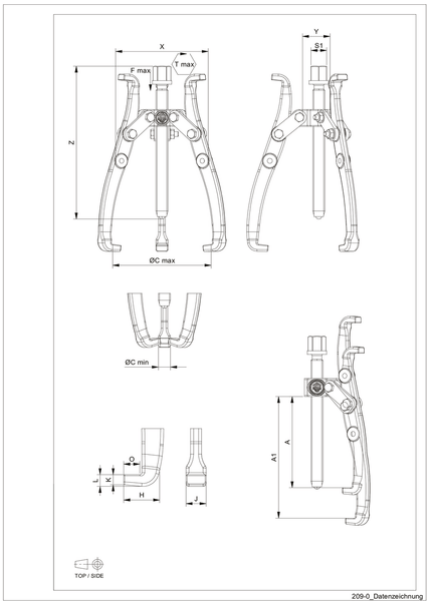

Abbreviation	Attribut	Wert
X	Total width [mm]	122 mm
Y	Total depth [mm]	122 mm
Z	Total height [mm]	75 mm
A	Clamping depth of external puller [mm]	50 mm
S1	Width across flats [mm]	13 mm
Cmin	Span outside pull-off (min.) [mm]	12 mm
Cmax	Span outside pull-off (max.) [mm]	100 mm
K	Hook root thickness at the tip (claw thickness K) [mm]	5 mm
J	Hook base width (claw width J) [mm]	10 mm
O	Hook base depth usable (claw depth usable O) [mm]	9 mm
H	Total hook root depth (total claw depth H) [mm]	20 mm
L	Total claw thickness (L+1mm) [mm]: (claw distance to base surface)	5 mm
Tmax	Max. torque [Nm]	20 Nm
Fmax	Max. tractive force [t]	1 t
Fmax	Max. tensile force [kN]	10 kN