30-10x 3-jaw universal puller with quick adjustment jaws, up to 130 mm spread, 100 mm reach



DESCRIPTION

The 3-jaw universal puller with quick-adjustment jaws is used for pulling bearings, gears and discs in all common sizes for trade, workshop and industry. This makes it possible to loosen any component that sits on a shaft and is freely accessible from the outside. Equipped with robust standard jaws and soft-touch knurled nuts for maximum operating comfort, this puller all-rounder ensures particularly safe, very user-friendly, non-destructive Removing both during external extraction and internal extraction. The 3-jaw design guarantees even load distribution and thus a particularly secure hold on the part to be pulled.

APPLICATION AREA

To detach bearings, gears, and discs in all common sizes for crafts, workshops, and industry.

BENEFIT

- Simple, manual solution of the Jaw clamps using hand knobs (Quick Adjust Technology)
- 3-jaw ensures an even distribution of force and allows for greater pulling forces.
- Optimized quick adjustment guarantees a particularly good haptics (even with wet or oily hands)
- Application also with eccentric components through freely movable puller hooks sliding on the crossbar.
- Hexagonal profile on the crossbar for secure counter-holding
- Quick-adjustable jaws guarantee an immediate adjustment to any span between 0 mm – 130 mm
- Safety of the claw mounting in the sliding piece (ARMLOCK Technology)
- Safe mounting of the spindle with a rotating spindle tip on both smooth surfaces and when centering (SWITCH Technology)
- TiN coating of the spindle tip provides better friction properties
- Optional convertible from an external puller to an internal extractor by reversing the jaws.
- Jaws, spindle, and crossbar have a spare part number for easy reordering.
- Spindle outlet to protect the thread

OPERATION

- Position the puller jaws on the part to be removed from the outside
- Slide the jaws under the component
- Use the hand knob for manual attachment of the jaws
- Manually pull the spindle for fixation
- Turn the hexagon on the spindle head with a ratchet or a box wrench until the component is loosened

APPLICATION IMAGE



MASTER DATA

GTIN [GTIN]	4021176041532
Country of origin	DE
Material	Tool steel
Series	30x
Gross weight [kg]	1,715 kg
Package contents	1 piece
Packaging Act	PAPPE PAP 21
Worldwide sales capability	Yes (REACH, RoHS, POP, PROP65, TSCA)

SPARE PARTS

- 1-92-Sx_3 quick-adjustable standard jaws (set)
- 30-10-T_Crossbar
- 614135_Mechanical Drive Spindle

3-jaw universal puller with quick adjustment jaws, up to 130 mm spread, 100 mm reach

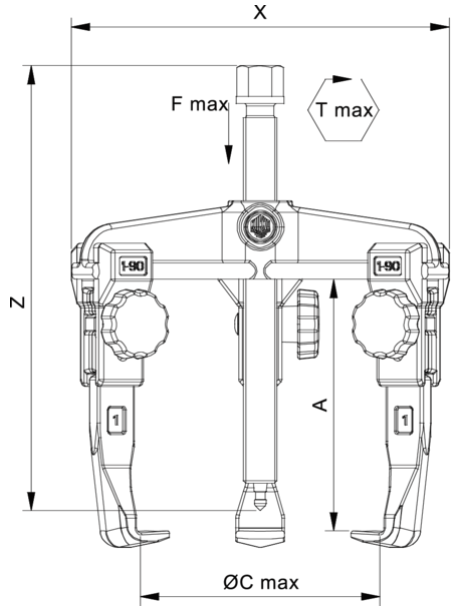

Abbreviation	Attribut	Wert
X	Total width [mm]	174 mm
Y	Total depth [mm]	174 mm
Z	Total height [mm]	158 mm
A	Clamping depth of external puller [mm]	100 mm
S1	Width across flats [mm]	17 mm
Cmin	Span outside pull-off (min.) [mm]	0 mm
Cmax	Span outside pull-off (max.) [mm]	130 mm
K	Hook root thickness at the tip (claw thickness K) [mm]	3 mm
J	Hook base width (claw width J) [mm]	20,5 mm
O	Hook base depth usable (claw depth usable O) [mm]	15,5 mm
H	Total hook root depth (total claw depth H) [mm]	31 mm
L	Total claw thickness (L+1mm) [mm]: (claw distance to base surface)	10 mm
Emin	Span inside pull-out (min.) [mm]	70 mm
Emax	Span inside pull-out (max.) [mm]	180 mm
Tmax	Max. torque [Nm]	80 Nm
Fmax	Max. tractive force [t]	8 t
Fmax	Max. tensile force [kN]	80 kN

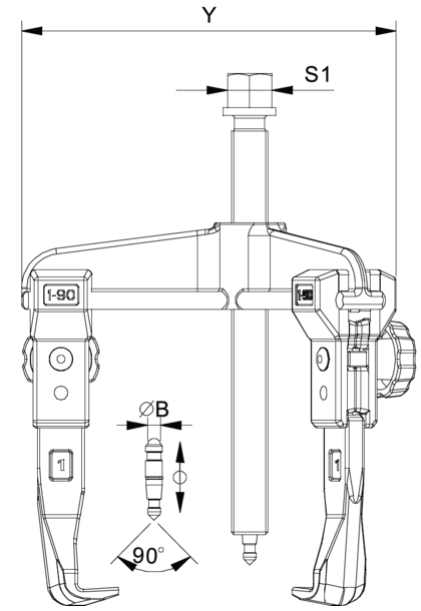

Abbreviation	Attribut	Wert
X	Total width [mm]	174 mm
Y	Total depth [mm]	174 mm
Z	Total height [mm]	158 mm
A	Clamping depth of external puller [mm]	100 mm
S1	Width across flats [mm]	17 mm
Cmin	Span outside pull-off (min.) [mm]	0 mm
Cmax	Span outside pull-off (max.) [mm]	130 mm
K	Hook root thickness at the tip (claw thickness K) [mm]	3 mm
J	Hook base width (claw width J) [mm]	20,5 mm
O	Hook base depth usable (claw depth usable O) [mm]	15,5 mm
H	Total hook root depth (total claw depth H) [mm]	31 mm
L	Total claw thickness (L+1mm) [mm]: (claw distance to base surface)	10 mm
Emin	Span inside pull-out (min.) [mm]	70 mm
Emax	Span inside pull-out (max.) [mm]	180 mm
Tmax	Max. torque [Nm]	80 Nm
Fmax	Max. tractive force [t]	8 t
Fmax	Max. tensile force [kN]	80 kN

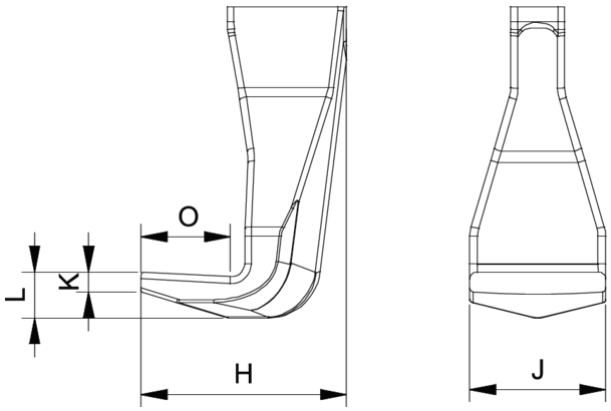

Abbreviation	Attribut	Wert
X	Total width [mm]	174 mm
Y	Total depth [mm]	174 mm
Z	Total height [mm]	158 mm
A	Clamping depth of external puller [mm]	100 mm

S1	Width across flats [mm]	17 mm
Cmin	Span outside pull-off (min.) [mm]	0 mm
Cmax	Span outside pull-off (max.) [mm]	130 mm
K	Hook root thickness at the tip (claw thickness K) [mm]	3 mm
J	Hook base width (claw width J) [mm]	20,5 mm
O	Hook base depth usable (claw depth usable O) [mm]	15,5 mm
H	Total hook root depth (total claw depth H) [mm]	31 mm
L	Total claw thickness (L+1mm) [mm]: (claw distance to base surface)	10 mm
Emin	Span inside pull-out (min.) [mm]	70 mm
Emax	Span inside pull-out (max.) [mm]	180 mm
Tmax	Max. torque [Nm]	80 Nm
Fmax	Max. tractive force [t]	8 t
Fmax	Max. tensile force [kN]	80 kN

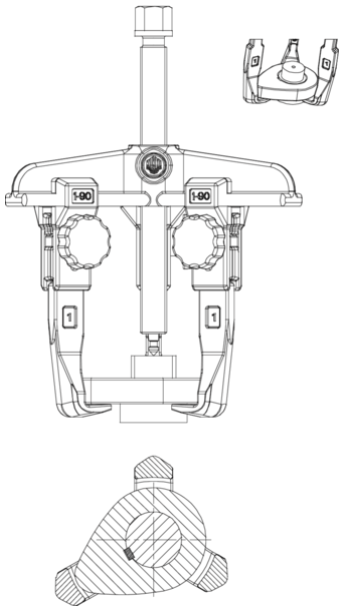

Abbreviation	Attribut	Wert
X	Total width [mm]	174 mm
Y	Total depth [mm]	174 mm
Z	Total height [mm]	158 mm
A	Clamping depth of external puller [mm]	100 mm
S1	Width across flats [mm]	17 mm
Cmin	Span outside pull-off (min.) [mm]	0 mm
Cmax	Span outside pull-off (max.) [mm]	130 mm
K	Hook root thickness at the tip (claw thickness K) [mm]	3 mm
J	Hook base width (claw width J) [mm]	20,5 mm
O	Hook base depth usable (claw depth usable O) [mm]	15,5 mm
H	Total hook root depth (total claw depth H) [mm]	31 mm
L	Total claw thickness (L+1mm) [mm]: (claw distance to base surface)	10 mm
Emin	Span inside pull-out (min.) [mm]	70 mm
Emax	Span inside pull-out (max.) [mm]	180 mm
Tmax	Max. torque [Nm]	80 Nm
Fmax	Max. tractive force [t]	8 t
Fmax	Max. tensile force [kN]	80 kN