Dop | Mondolfo Ferro 429006

Mondolfo Ferro Aquila AS 905 · 2020 · Tekening 18 · positie 7

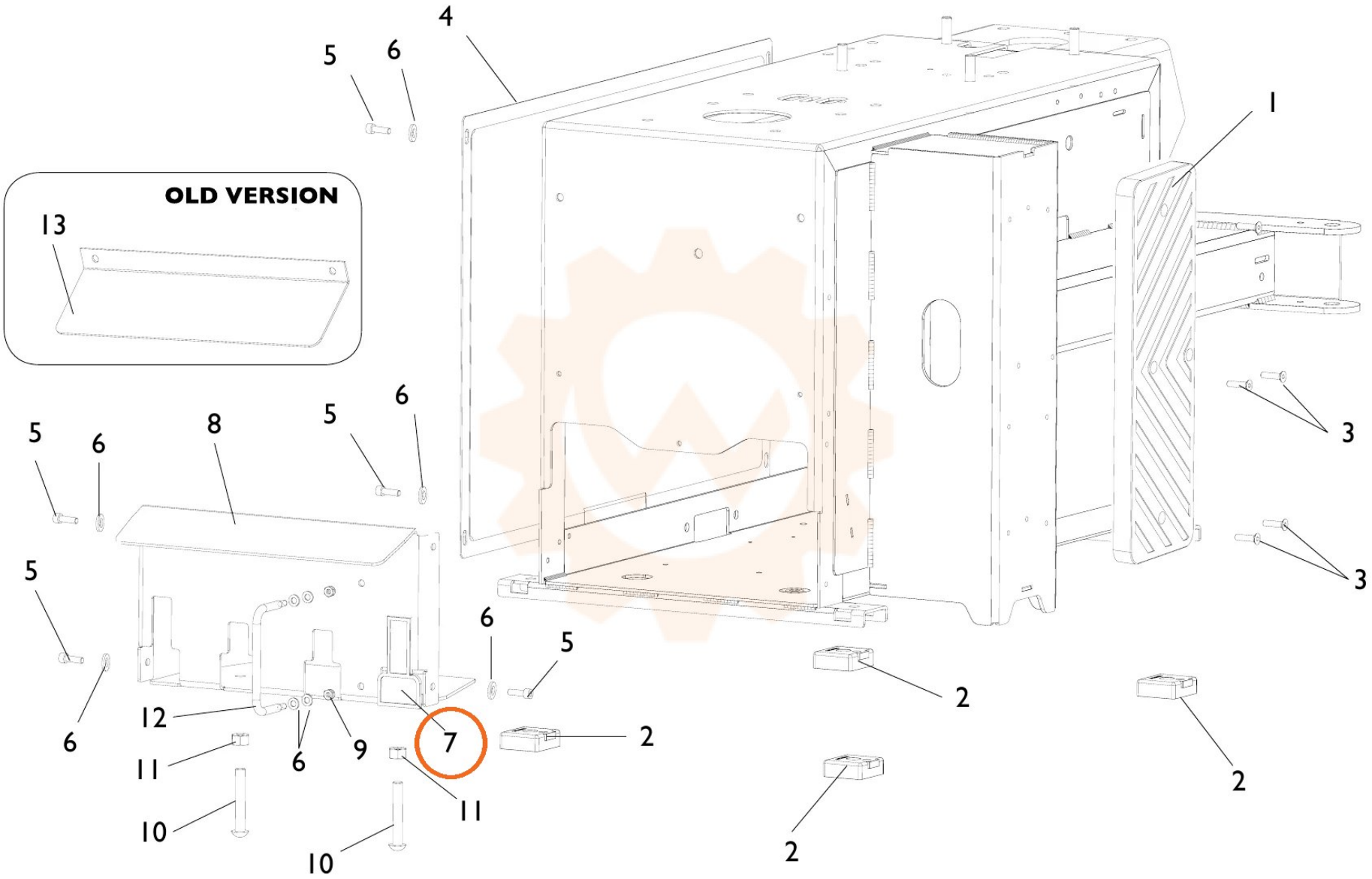
OLD VERSION
1
2
3
4
5
6
7
8
9
10
11
12
13