130-20 3-jaw universal puller "VARIO" with spring-loaded fall protection, up to 260 mm spread, 150 mm reach



DESCRIPTION

The 3-jaw universal puller "VARIO" with spring-loaded anti-slip safety is used for removing bearings, gears, and discs in all common sizes for crafts, workshops, and industry. This allows for the loosening of any component that is mounted on a shaft and is freely accessible from the outside. Equipped with robust, always parallel puller jaws, the puller ensures a particularly safe, non-destructive disassembly whether for external extraction or internal removal. The anti-slip safety prevents the puller jaws from slipping off the crossbar. The 3-jaw design guarantees an even load distribution, thereby providing a particularly secure hold on the part to be removed.

APPLICATION AREA

To detach bearings, gears, and discs in all common sizes for crafts, workshops, and industry.

BENEFIT

- Fall protection protects against the jaws sliding off the crossbar.
- By pressing down the safety latch, a particularly fast flipping of the jaws is guaranteed.
- 3-jaw ensures an even force distribution and allows for greater pulling forces.
- Application also for eccentric components through freely movable, sliding jaws on the crossbar.
- Safe installation of the spindle using a rotatable spindle tip on both smooth surfaces and during centering (Switch Technology)
- Secure mounting of the spindle through the rotatable spindle tip on both smooth surfaces and in centering (Switch Technology)
- Optional convertible from an external puller to an internal extractor by reversing the jaws.
- Anti-slip safety (spindle neck) at the spindle head for safe working with socket wrench.
- Spindle outlet to protect the thread

OPERATION

- Place the puller jaws from the outside onto the part to be pulled off
- Slide the claws under the component
- Manually pull the spindle for fixation under pressure
- Set the hexagon on the spindle head in motion with a ratchet or a box-end wrench until the component is released

MASTER DATA

GTIN [GTIN]	4021176918919
Country of origin	DE
Material	Tool steel
Series	130
Gross weight [kg]	4,28 kg
Package contents	1 piece
Packaging Act	PAPPE PAP 21
Worldwide sales capability	Yes (REACH, RoHS, POP, PROP65, TSCA)

SPARE PARTS

- 0-150-S_3 jaws (set)
- 130-20-T_Crossbar
- 621170_Mechanical spindle

3-jaw universal puller "VARIO" with spring-loaded fall protection, up to 260 mm spread, 150 mm reach

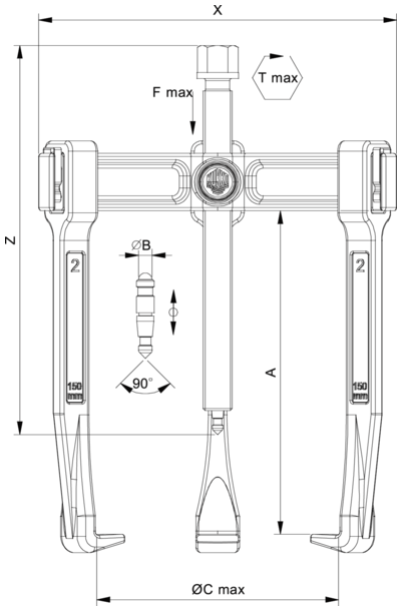

Abbreviation	Attribut	Wert
X	Total width [mm]	316 mm
Y	Total depth [mm]	316 mm
Z	Total height [mm]	205 mm
A	Clamping depth of external puller [mm]	150 mm
S1	Width across flats [mm]	24 mm
Cmin	Span outside pull-off (min.) [mm]	20 mm
Cmax	Span outside pull-off (max.) [mm]	260 mm
K	Hook root thickness at the tip (claw thickness K) [mm]	5 mm
J	Hook base width (claw width J) [mm]	28,5 mm
O	Hook base depth usable (claw depth usable O) [mm]	20 mm
H	Total hook root depth (total claw depth H) [mm]	44 mm
L	Total claw thickness (L+1mm) [mm]: (claw distance to base surface)	15 mm
Emin	Span inside pull-out (min.) [mm]	120 mm
Emax	Span inside pull-out (max.) [mm]	300 mm
Tmax	Max. torque [Nm]	110 Nm
Fmax	Max. tractive force [t]	3.5 t
Fmax	Max. tensile force [kN]	35 kN

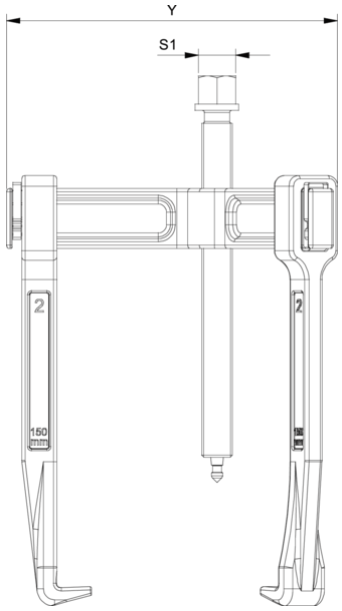

Abbreviation	Attribut	Wert
X	Total width [mm]	316 mm
Y	Total depth [mm]	316 mm
Z	Total height [mm]	205 mm
A	Clamping depth of external puller [mm]	150 mm
S1	Width across flats [mm]	24 mm
Cmin	Span outside pull-off (min.) [mm]	20 mm
Cmax	Span outside pull-off (max.) [mm]	260 mm
K	Hook root thickness at the tip (claw thickness K) [mm]	5 mm
J	Hook base width (claw width J) [mm]	28,5 mm
O	Hook base depth usable (claw depth usable O) [mm]	20 mm
H	Total hook root depth (total claw depth H) [mm]	44 mm
L	Total claw thickness (L+1mm) [mm]: (claw distance to base surface)	15 mm
Emin	Span inside pull-out (min.) [mm]	120 mm
Emax	Span inside pull-out (max.) [mm]	300 mm
Tmax	Max. torque [Nm]	110 Nm
Fmax	Max. tractive force [t]	3.5 t
Fmax	Max. tensile force [kN]	35 kN

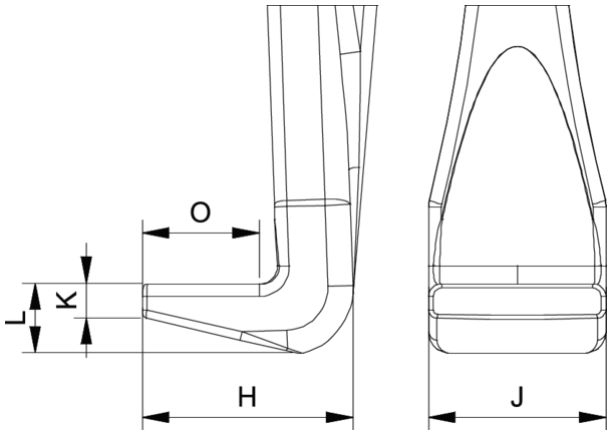

Abbreviation	Attribut	Wert
X	Total width [mm]	316 mm
Y	Total depth [mm]	316 mm
Z	Total height [mm]	205 mm

A	Clamping depth of external puller [mm]	150 mm
S1	Width across flats [mm]	24 mm
Cmin	Span outside pull-off (min.) [mm]	20 mm
Cmax	Span outside pull-off (max.) [mm]	260 mm
K	Hook root thickness at the tip (claw thickness K) [mm]	5 mm
J	Hook base width (claw width J) [mm]	28,5 mm
O	Hook base depth usable (claw depth usable O) [mm]	20 mm
H	Total hook root depth (total claw depth H) [mm]	44 mm
L	Total claw thickness (L+1mm) [mm]: (claw distance to base surface)	15 mm
Emin	Span inside pull-out (min.) [mm]	120 mm
Emax	Span inside pull-out (max.) [mm]	300 mm
Tmax	Max. torque [Nm]	110 Nm
Fmax	Max. tractive force [t]	3.5 t
Fmax	Max. tensile force [kN]	35 kN