114-3 2-/3-jaw combination puller with self-centering jaws 7 t



APPLICATION AREA

For pulling off bearings, gears, discs, and similar components

BENEFIT

- Self-centering jaws with spring tension (Autogrip Technology)
- Optional convertible from an external puller to an internal extractor by reversing the jaws.
- The combination crossbar allows for both 2-jaw and 3-jaw Pulling.
- 3-jaw ensures an even distribution of force and allows for greater pulling forces.

MASTER DATA

GTIN [GTIN]	4021176010941
Country of origin	DE
Material	Tool steel
Series	114
Gross weight [kg]	0,3 kg
Package contents	1 piece
Packaging Act	PAPPE PAP 21
Worldwide sales capability	Yes (REACH, RoHS, POP, PROP65, TSCA)

SPARE PARTS

- 616220_Mechanical clamping spindle

APPLICATION IMAGE



DETAIL IMAGE



2-/3-jaw combination puller with self-centering jaws 7 t

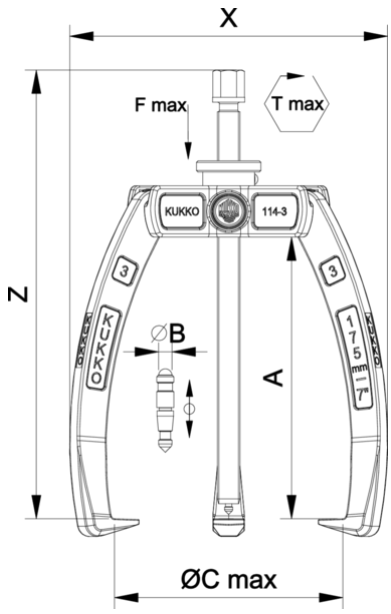

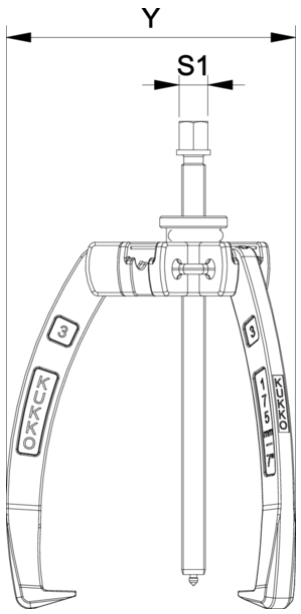

Abbreviation	Attribut	Wert
X	Total width [mm]	198 mm
Y	Total depth [mm]	172 mm
Z	Total height [mm]	280 mm
A	Clamping depth of external puller [mm]	175 mm
S1	Width across flats [mm]	17 mm
Cmin	Span outside pull-off (min.) [mm]	0 mm
Cmax	Span outside pull-off (max.) [mm]	175 mm
K	Hook root thickness at the tip (claw thickness K) [mm]	3 mm
J	Hook base width (claw width J) [mm]	20 mm
O	Hook base depth usable (claw depth usable O) [mm]	17,5 mm
H	Total hook root depth (total claw depth H) [mm]	40 mm
L	Total claw thickness (L+1mm) [mm]: (claw distance to base surface)	13 mm
Emin	Span inside pull-out (min.) [mm]	40 mm
Emax	Span inside pull-out (max.) [mm]	110 mm
Tmax	Max. torque [Nm]	115 Nm
Fmax	Max. tractive force [t]	7 t
Fmax	Max. tensile force [kN]	70 kN
B	Center point diameter [mm]	5

Abbreviation	Attribut	Wert
X	Total width [mm]	198 mm
Y	Total depth [mm]	172 mm
Z	Total height [mm]	280 mm
A	Clamping depth of external puller [mm]	175 mm
S1	Width across flats [mm]	17 mm
Cmin	Span outside pull-off (min.) [mm]	0 mm
Cmax	Span outside pull-off (max.) [mm]	175 mm
K	Hook root thickness at the tip (claw thickness K) [mm]	3 mm
J	Hook base width (claw width J) [mm]	20 mm
O	Hook base depth usable (claw depth usable O) [mm]	17,5 mm
H	Total hook root depth (total claw depth H) [mm]	40 mm
L	Total claw thickness (L+1mm) [mm]: (claw distance to base surface)	13 mm
Emin	Span inside pull-out (min.) [mm]	40 mm
Emax	Span inside pull-out (max.) [mm]	110 mm
Tmax	Max. torque [Nm]	115 Nm
Fmax	Max. tractive force [t]	7 t
Fmax	Max. tensile force [kN]	70 kN
B	Center point diameter [mm]	5

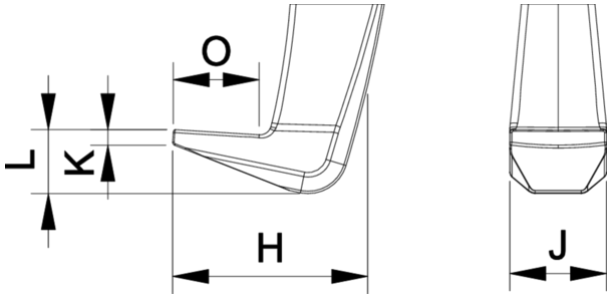

Abbreviation	Attribut	Wert
X	Total width [mm]	198 mm
Y	Total depth [mm]	172 mm
Z	Total height [mm]	280 mm
A	Clamping depth of external puller [mm]	175 mm
S1	Width across flats [mm]	17 mm
Cmin	Span outside pull-off (min.) [mm]	0 mm
Cmax	Span outside pull-off (max.) [mm]	175 mm
K	Hook root thickness at the tip (claw thickness K) [mm]	3 mm

J	Hook base width (claw width J) [mm]	20 mm
O	Hook base depth usable (claw depth usable O) [mm]	17,5 mm
H	Total hook root depth (total claw depth H) [mm]	40 mm
L	Total claw thickness (L+1mm) [mm]: (claw distance to base surface)	13 mm
Emin	Span inside pull-out (min.) [mm]	40 mm
Emax	Span inside pull-out (max.) [mm]	110 mm
Tmax	Max. torque [Nm]	115 Nm
Fmax	Max. tractive force [t]	7 t
Fmax	Max. tensile force [kN]	70 kN
B	Center point diameter [mm]	5

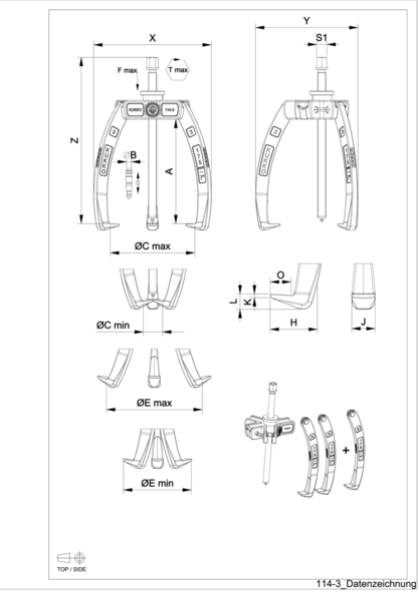

114-3_Datenzeichnung

Abbreviation	Attribut	Wert
X	Total width [mm]	198 mm
Y	Total depth [mm]	172 mm
Z	Total height [mm]	280 mm
A	Clamping depth of external puller [mm]	175 mm
S1	Width across flats [mm]	17 mm
Cmin	Span outside pull-off (min.) [mm]	0 mm
Cmax	Span outside pull-off (max.) [mm]	175 mm
K	Hook root thickness at the tip (claw thickness K) [mm]	3 mm
J	Hook base width (claw width J) [mm]	20 mm
O	Hook base depth usable (claw depth usable O) [mm]	17,5 mm
H	Total hook root depth (total claw depth H) [mm]	40 mm
L	Total claw thickness (L+1mm) [mm]: (claw distance to base surface)	13 mm
Emin	Span inside pull-out (min.) [mm]	40 mm
Emax	Span inside pull-out (max.) [mm]	110 mm
Tmax	Max. torque [Nm]	115 Nm
Fmax	Max. tractive force [t]	7 t
Fmax	Max. tensile force [kN]	70 kN
B	Center point diameter [mm]	5