114-2 2-/3-jaw combination puller with self-centering jaws 5 t



APPLICATION AREA

For pulling off bearings, gears, discs, and similar components

BENEFIT

- Self-centering jaws with spring tension (Autogrip Technology)
- Optional convertible from an external puller to an internal extractor by reversing the jaws.
- The combination crossbar allows for both 2-jaw and 3-jaw Pulling.
- 3-jaw ensures an even distribution of force and allows for greater pulling forces.

MASTER DATA

GTIN [GTIN]	4021176009372
Country of origin	DE
Material	Tool steel
Series	114
Gross weight [kg]	0,3 kg
Package contents	1 piece
Packaging Act	Rezykkat rHDPE 61
Worldwide sales capability	Yes (REACH, RoHS, POP, PROP65, TSCA)

SPARE PARTS

- 614160_Mechanical pressure spindle

APPLICATION IMAGE



DETAIL IMAGE



2-/3-jaw combination puller with self-centering jaws 5 t

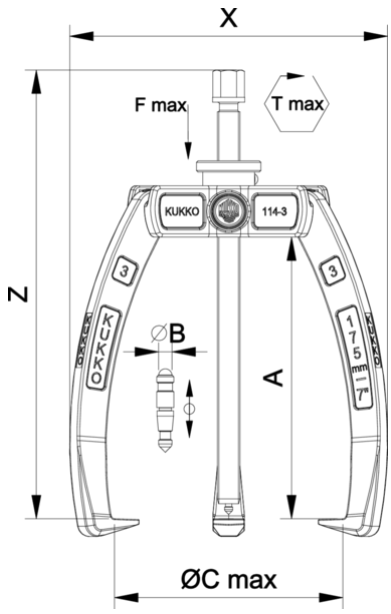

Abbreviation	Attribut	Wert
X	Total width [mm]	130 mm
Y	Total depth [mm]	114 mm
Z	Total height [mm]	175 mm
A	Clamping depth of external puller [mm]	100 mm
S1	Width across flats [mm]	17 mm
Cmin	Span outside pull-off (min.) [mm]	0 mm
Cmax	Span outside pull-off (max.) [mm]	100 mm
K	Hook root thickness at the tip (claw thickness K) [mm]	3 mm
J	Hook base width (claw width J) [mm]	15 mm
O	Hook base depth usable (claw depth usable O) [mm]	15 mm
H	Total hook root depth (total claw depth H) [mm]	30 mm
L	Total claw thickness (L+1mm) [mm]: (claw distance to base surface)	9 mm
Emin	Span inside pull-out (min.) [mm]	62 mm
Emax	Span inside pull-out (max.) [mm]	100 mm
Tmax	Max. torque [Nm]	60 Nm
Fmax	Max. tractive force [t]	5 t
Fmax	Max. tensile force [kN]	50 kN
B	Center point diameter [mm]	5 mm

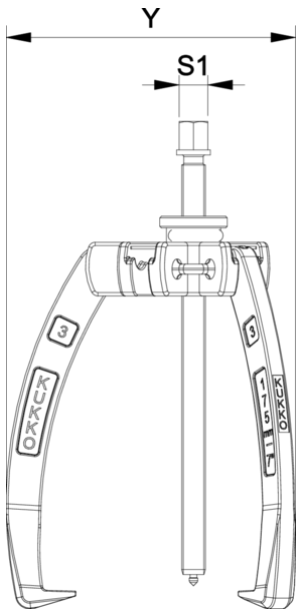

Abbreviation	Attribut	Wert
X	Total width [mm]	130 mm
Y	Total depth [mm]	114 mm
Z	Total height [mm]	175 mm
A	Clamping depth of external puller [mm]	100 mm
S1	Width across flats [mm]	17 mm
Cmin	Span outside pull-off (min.) [mm]	0 mm
Cmax	Span outside pull-off (max.) [mm]	100 mm
K	Hook root thickness at the tip (claw thickness K) [mm]	3 mm
J	Hook base width (claw width J) [mm]	15 mm
O	Hook base depth usable (claw depth usable O) [mm]	15 mm
H	Total hook root depth (total claw depth H) [mm]	30 mm
L	Total claw thickness (L+1mm) [mm]: (claw distance to base surface)	9 mm
Emin	Span inside pull-out (min.) [mm]	62 mm
Emax	Span inside pull-out (max.) [mm]	100 mm
Tmax	Max. torque [Nm]	60 Nm
Fmax	Max. tractive force [t]	5 t
Fmax	Max. tensile force [kN]	50 kN
B	Center point diameter [mm]	5 mm

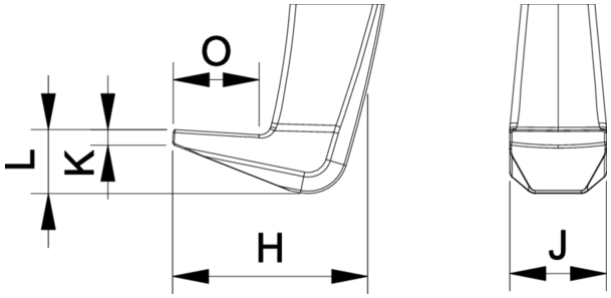

Abbreviation	Attribut	Wert
X	Total width [mm]	130 mm
Y	Total depth [mm]	114 mm
Z	Total height [mm]	175 mm
A	Clamping depth of external puller [mm]	100 mm
S1	Width across flats [mm]	17 mm
Cmin	Span outside pull-off (min.) [mm]	0 mm
Cmax	Span outside pull-off (max.) [mm]	100 mm
K	Hook root thickness at the tip (claw thickness K) [mm]	3 mm

J	Hook base width (claw width J) [mm]	15 mm
O	Hook base depth usable (claw depth usable O) [mm]	15 mm
H	Total hook root depth (total claw depth H) [mm]	30 mm
L	Total claw thickness (L+1mm) [mm]: (claw distance to base surface)	9 mm
Emin	Span inside pull-out (min.) [mm]	62 mm
Emax	Span inside pull-out (max.) [mm]	100 mm
Tmax	Max. torque [Nm]	60 Nm
Fmax	Max. tractive force [t]	5 t
Fmax	Max. tensile force [kN]	50 kN
B	Center point diameter [mm]	5 mm

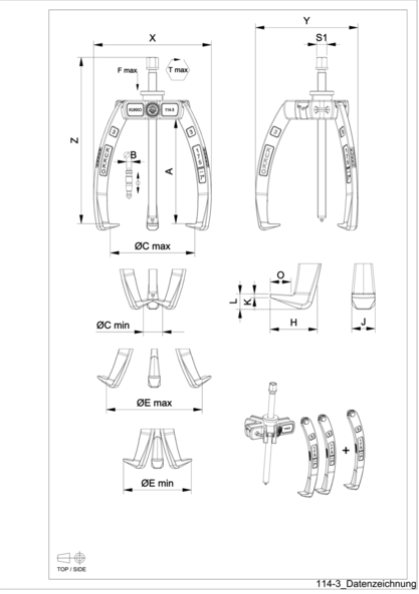

114-3_Datenzeichnung

Abbreviation	Attribut	Wert
X	Total width [mm]	130 mm
Y	Total depth [mm]	114 mm
Z	Total height [mm]	175 mm
A	Clamping depth of external puller [mm]	100 mm
S1	Width across flats [mm]	17 mm
Cmin	Span outside pull-off (min.) [mm]	0 mm
Cmax	Span outside pull-off (max.) [mm]	100 mm
K	Hook root thickness at the tip (claw thickness K) [mm]	3 mm
J	Hook base width (claw width J) [mm]	15 mm
O	Hook base depth usable (claw depth usable O) [mm]	15 mm
H	Total hook root depth (total claw depth H) [mm]	30 mm
L	Total claw thickness (L+1mm) [mm]: (claw distance to base surface)	9 mm
Emin	Span inside pull-out (min.) [mm]	62 mm
Emax	Span inside pull-out (max.) [mm]	100 mm
Tmax	Max. torque [Nm]	60 Nm
Fmax	Max. tractive force [t]	5 t
Fmax	Max. tensile force [kN]	50 kN
B	Center point diameter [mm]	5 mm