Usb-kabel standaard | Mondolfo Ferro 3-900105

Corghi Exact Linear · 2016 · Tekening 2 · positie 9 (2 keer op deze tekening)

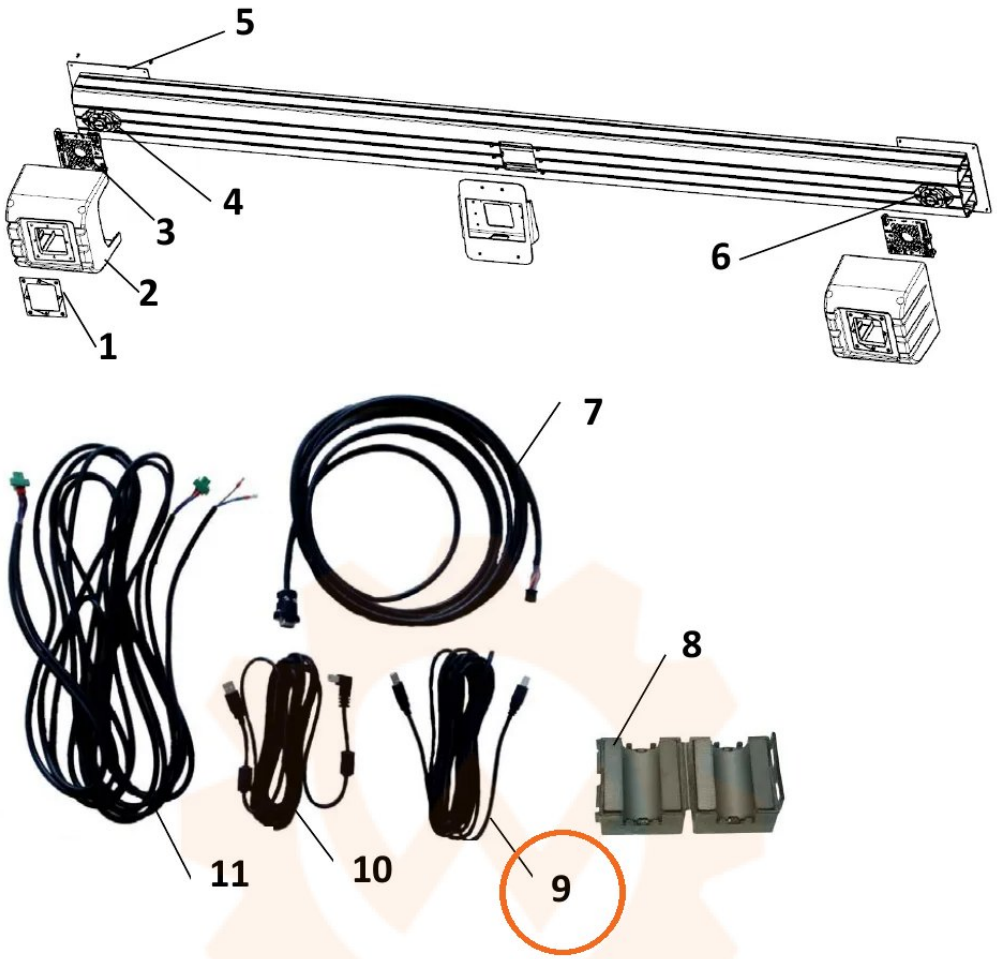

Line No	Item Number	Item Name
1	4-900207	STICKER
2	4-900214	CAMERA COVER
3	4-900228	LED PCBA
4	5-900081	LEFT CAMERA ASSEMBLY
5	4-900213	REAR COVER
6	5-900104	RIGHT CAMERA ASSEMBLY
7	4-900351	CONTROL CABLE
8	3-900108	SNAP RING,FERRITE
9	3-900105	USB CABLE, STANDARD CONNECTOR
10	3-900135	USB CABLE, 90D CONNECTOR
11	3-900114	LED BOARD POWER CORD