CORGHI	JOLLY	Fig. G	09b/97	Gruppo manometro + limitatore

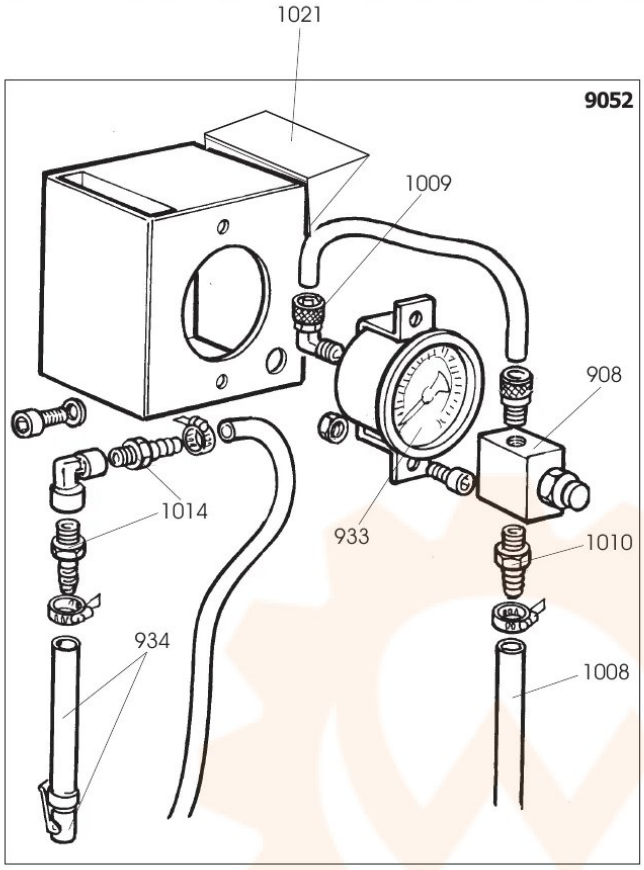

PANZITTA SALES & SERVICE
72 George Avenue
Wilkes-Barre, PA 18705
570-822-6720 800-822-6720
www.panzittasales.com

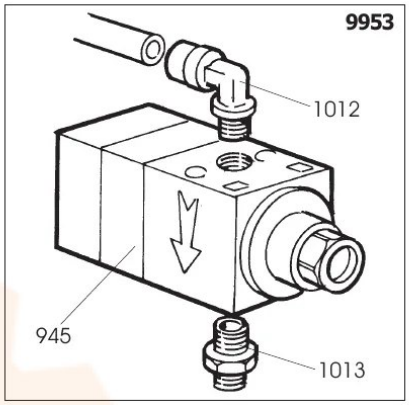

Ø 6	900701684	TUBO	PIPE	ROHR	TUYAU
Ø 8	900701683	TUBO	PIPE	ROHR	TUYAU
Ø 10	900701875	TUBO	PIPE	ROHR	TUYAU

9952	**900252598**	**SCATOLA - BAR**	**BOX - BAR**	**SCHACHTEL - BAR**	**BOITE - BAR**
9952	**900252599**	**SCATOLA - BAR/PSI**	**BOX - BAR/PSI**	**SCHACHTEL - BAR/PSI**	**BOITE - BAR/PSI**
0934	900235462	TUBO	PIPE	ROHR	TUYAU
		MANOMETRO	PRESSURE GAUGE	DRUCKMESSER	MANOMETRE
0933	900434175	BAR	BAR	BAR	BAR
0933	900437831	BAR - PSI	BAR - PSI	BAR - PSI	BAR - PSI
0908	900235463	VALVOLA	VALVE	VENTIL	VANNE
1008	900352614	TUBO aria	PIPE	ROHR	TUYAU
1009	900434180	RACCORDO	CONNECTOR	ANSCHLUSS	RACCORD
1014	900429536	INNESTO	CLUTCH	KUPPLUNG	EMBRAYAGE

1121	**900341101**	**SUPPORTO**	**SUPPORT**	**LAGER**	**SUPPORT**

9953	**801252558**	**VALVOLA**	**VALVE**	**VENTIL**	**VANNE**
0945	900452553	VALVOLA	VALVE	VENTIL	VANNE
1012	900446939	RACCORDO	CONNECTOR	ANSCHLUSS	RACCORD
1013	900352557	RACCORDO	CONNECTOR	ANSCHLUSS	RACCORD