Handgreep met hefboom | Mondolfo Ferro 5-101931

Corghi Artiglio 55 · 2017 · Handle locking wheel · positie 8 (2 keer op deze tekening)

WORKSHOP PARTS

MANIGLIA BLOCCAGGIO RUOTA
HANDLE LOCKING WHEEL

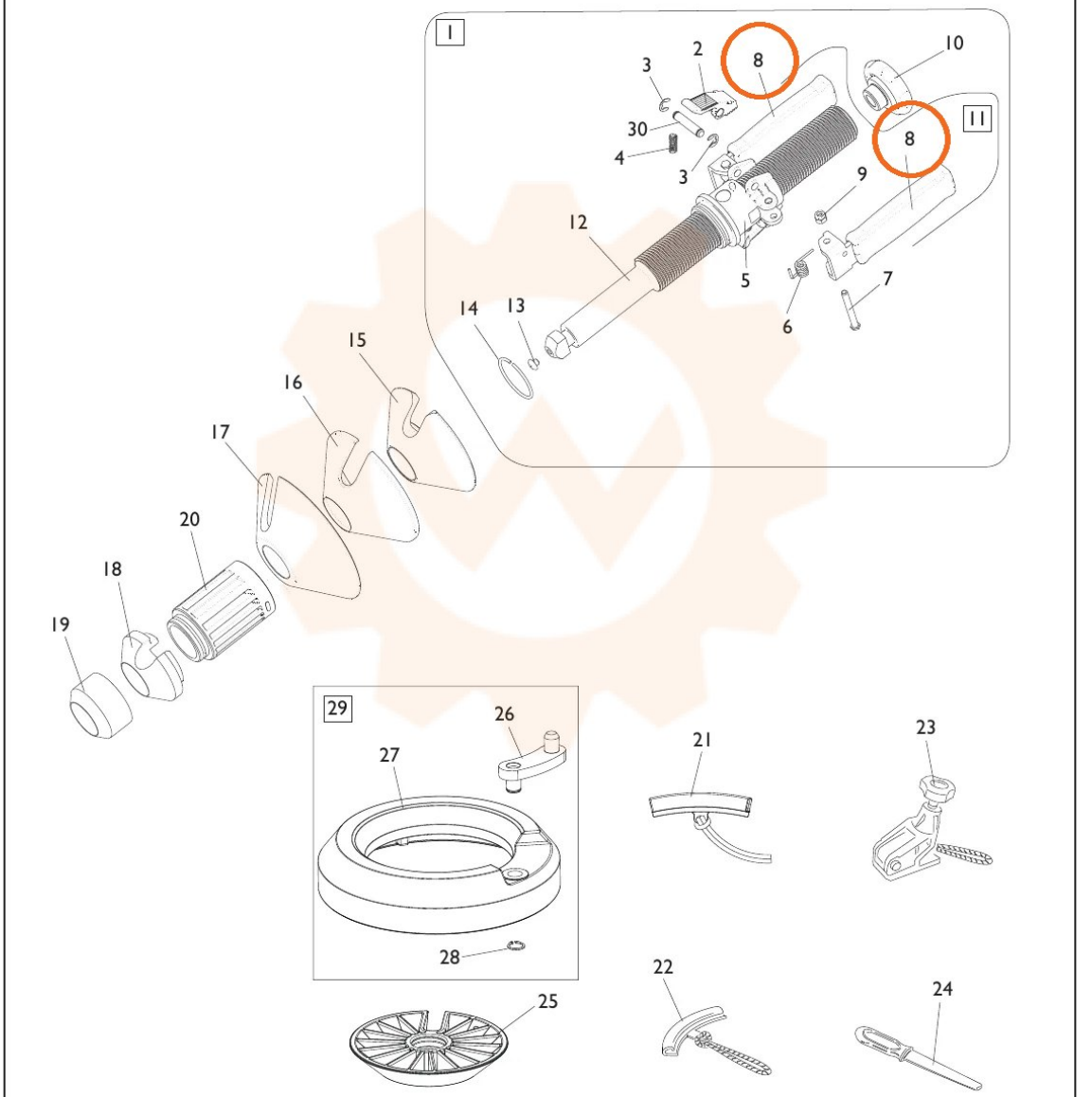

PANZITTA SALES & SERVICE
72 George Avenue
Wilkes-Barre, PA 18705
570-822-6720 800-822-6720
www.panzittasales.com