Sluitring D. 9 x 24 x 2 | Mondolfo Ferro 2-01299

Mondolfo Ferro MT3800 · 2017 · Tekening 34 · positie 8

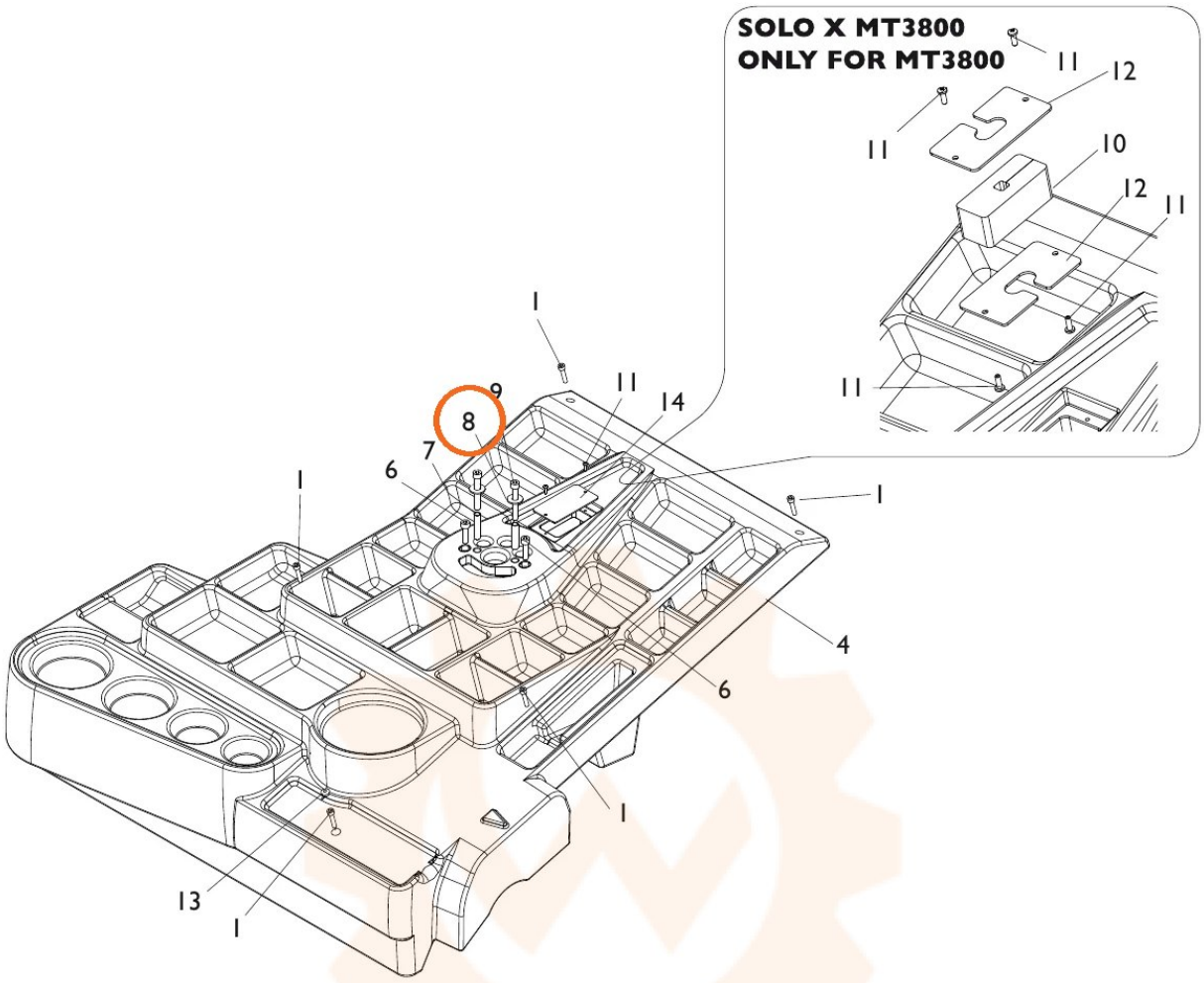

VISTA ANTERIORE
FRONT VIEW

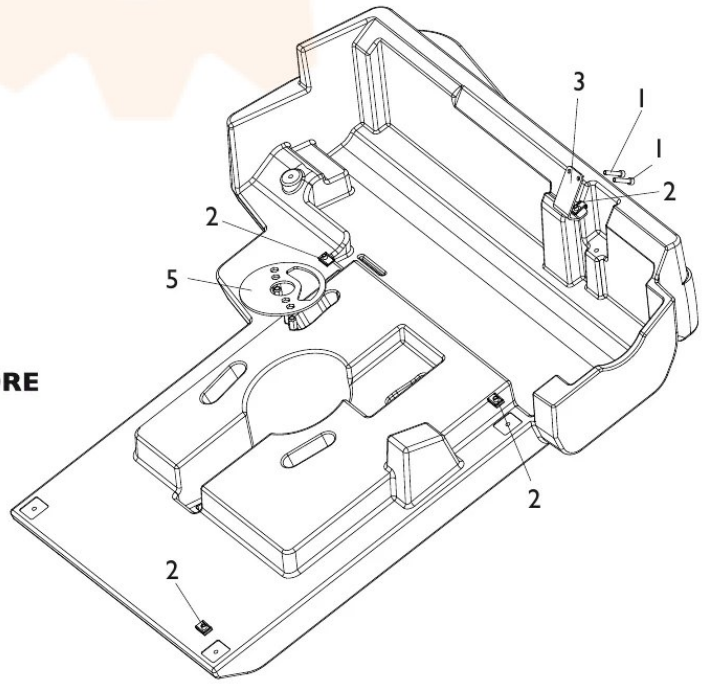

VISTA POSTERIORE
REAR VIEW