Lo-fitting G1/8 met O-ring | Mondolfo Ferro 3-02044

Mondolfo Ferro Aquila AS 944 · 2025 · Tekening 2 · positie 86

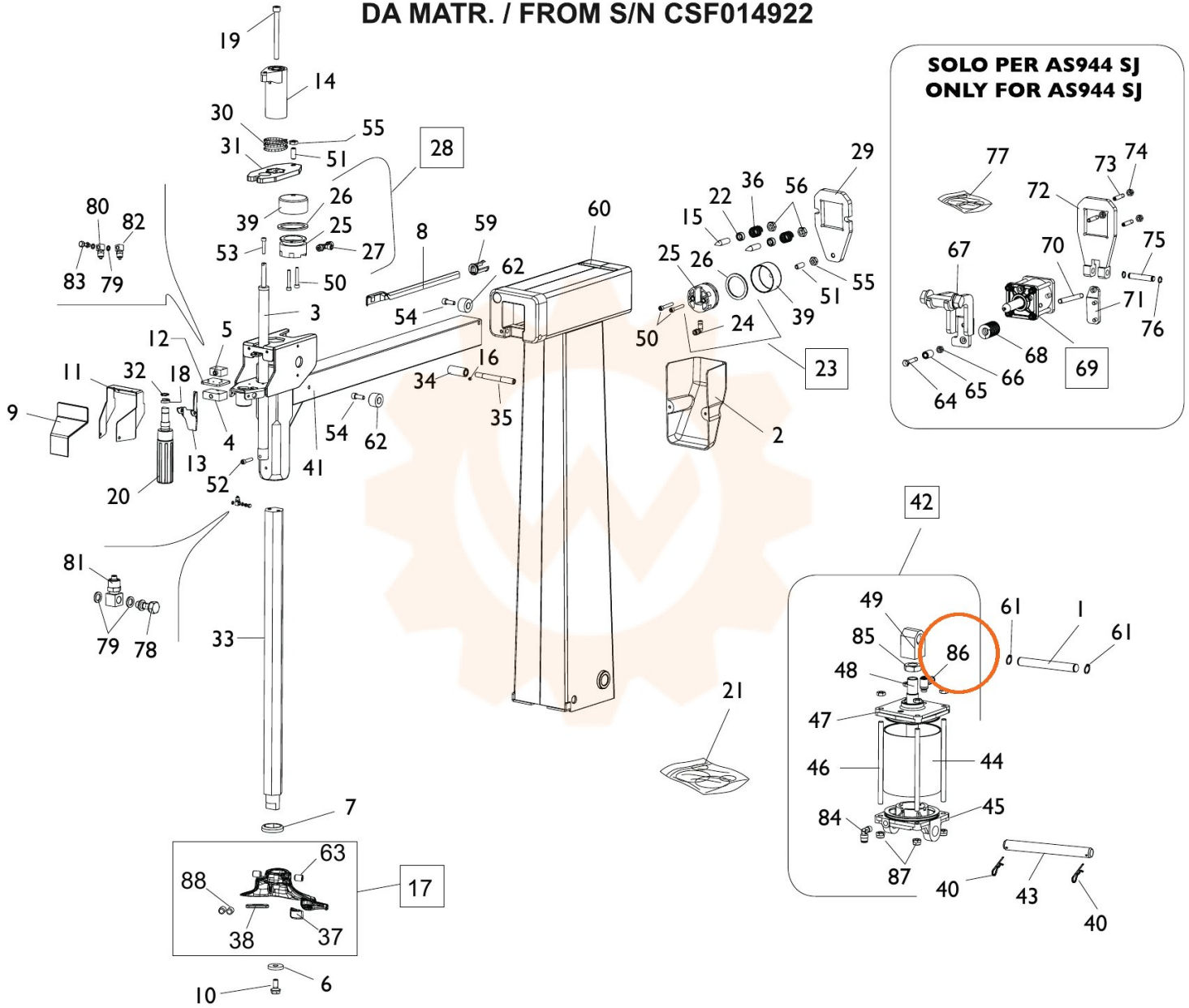
DA MATR. / FROM S/N CSF014922
SOLO PER AS944 SJ
ONLY FOR AS944 SJ
19
14
30
55
31
51
28
26
39
25
53
27
80
82
83
79
50
3
12
5
11
32
18
9
4
13
20
52
41
54
62
8
59
62
54
60
16
34
35
29
36
56
22
15
25
26
55
51
39
50
24
23
2
77
73
74
72
75
67
70
71
76
68
69
66
65
64
42
49
61
1
61
85
86
48
47
46
44
84
45
87
40
43
40
21
81
79
78
33
7
63
88
38
37
17
10
6