Y-fitting T8 | Mondolfo Ferro FPY-8

Mondolfo Ferro Startline S1450 · 2022 · Tekening 31 · positie 13

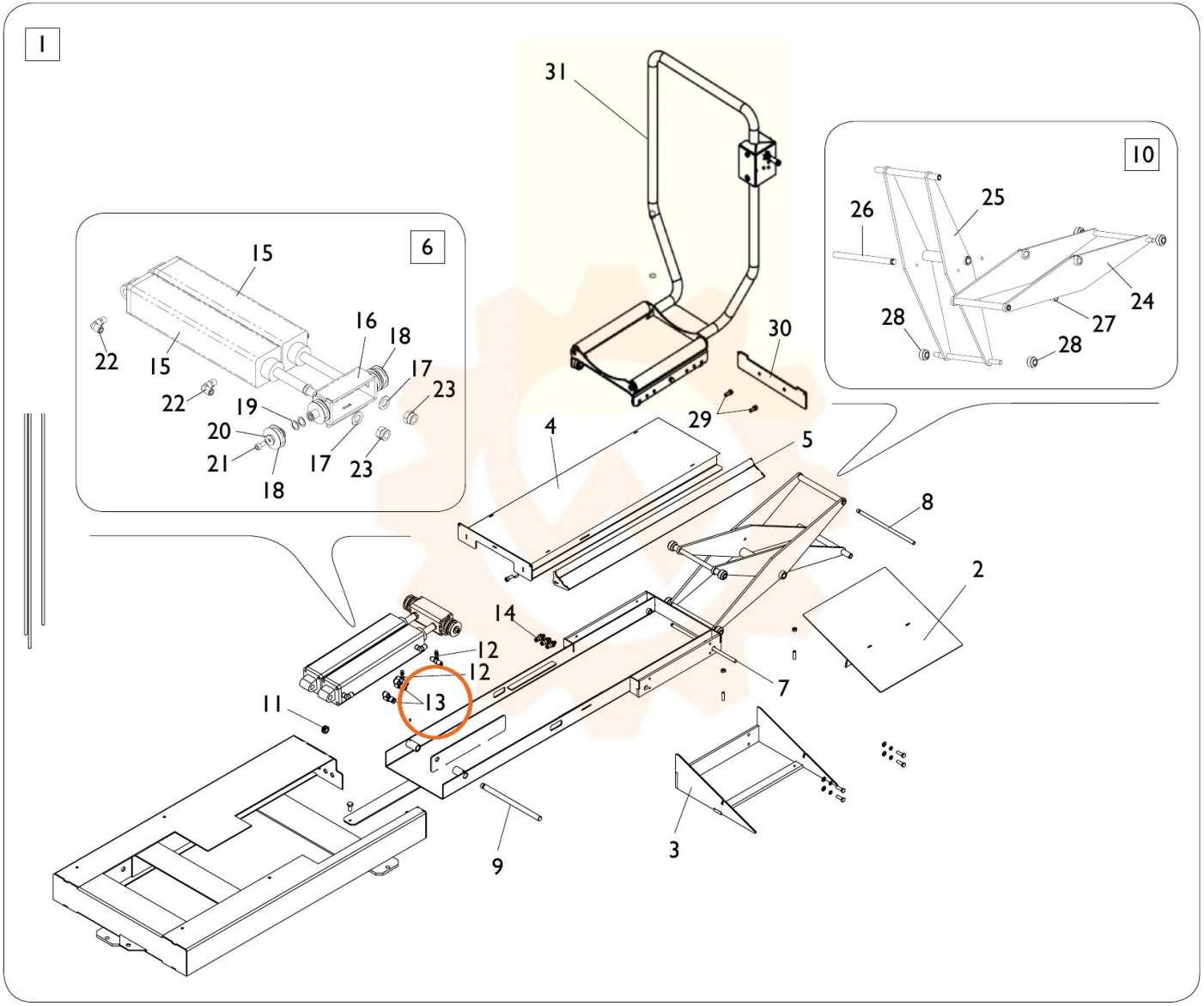
1
31
10
26
25
24
28
27
28
6
15
16
18
17
23
22
15
22
19
20
21
17
23
18
30
29
4
5
8
2
14
12
12
13
11
7
9
3