# 205-01 2-jaw puller with oscillating, height-adjustable jaws, up to 150 mm spread, 150 mm reach




## DESCRIPTION

The heavy, 2-jaw puller with oscillating and height-adjustable jaws is used for the central extraction of large bearings, gears, and discs in all common sizes for crafts, workshops, and industry. This allows for loosening any component that is mounted on a shaft and accessible from the outside. The oscillating jaws adapt to any installation situation and can be universally used due to the adjustable reach. Depending on the version, the claw shape varies.

## APPLICATION AREA

For central removal of large bearings, gears, and discs in all common sizes for craft, workshop, and industry.

## BENEFIT

- Adjustable puller jaws for individual adaptation of the reach.
- Oscillating puller jaws offer a variety of adjustment options
- Claw end with slot provides support for screw for additional support when pulling off
- Safe installation of the spindle using a rotatable spindle tip on both smooth surfaces and during centering (Switch Technology)
- Spindle extension for the protection of the thread

## MASTER DATA

| | |
|---|---|
| GTIN [GTIN] | 4021176028656 |
| Country of origin | DE |
| Material | Tool steel |
| Series | 205 |
| Gross weight [kg] | 1,035 kg |
| Package contents | 1 piece |
| Packaging Act | PAPPE PAP 21 |
| Worldwide sales capability | Yes (REACH, RoHS, POP, PROP65, TSCA) |

## SPARE PARTS

- 201-1-T_Crossbar
- 205-01-150-P_2 puller jaws with adjustable reach (pair)
- 612140_Double-sided spindle tip
- 614160_Mechanical pressure spindle

## APPLICATION IMAGE



# 2-jaw puller with oscillating, height-adjustable jaws, up to 150 mm spread, 150 mm reach

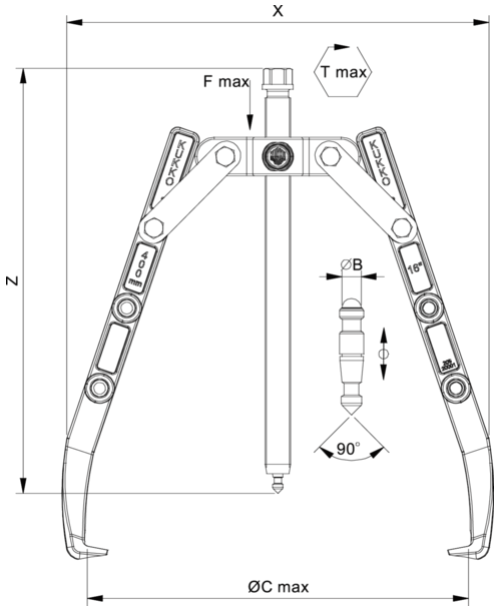


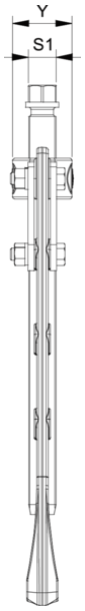


| Abbreviation | Attribut | Wert |
|---|---|---|
| X | Total width [mm] | 204 mm |
| Y | Total depth [mm] | 30 mm |
| Z | Total height [mm] | 181 mm |
| A | Clamping depth of external puller [mm] | 150 mm |
| S1 | Width across flats [mm] | 17 mm |
| Cmin | Span outside pull-off (min.) [mm] | 0 mm |
| Cmax | Span outside pull-off (max.) [mm] | 150 mm |
| K | Hook root thickness at the tip (claw thickness K) [mm] | 3 mm |
| J | Hook base width (claw width J) [mm] | 18 mm |
| O | Hook base depth usable (claw depth usable O) [mm] | 14 mm |
| H | Total hook root depth (total claw depth H) [mm] | 41 mm |
| L | Total claw thickness (L+1mm) [mm]: (claw distance to base surface) | 8 mm |
| Tmax | Max. torque [Nm] | 120 Nm |
| Fmax | Max. tractive force [t] | 5 t |
| Fmax | Max. tensile force [kN] | 50 kN |


| Abbreviation | Attribut | Wert |
|---|---|---|
| X | Total width [mm] | 204 mm |
| Y | Total depth [mm] | 30 mm |
| Z | Total height [mm] | 181 mm |
| A | Clamping depth of external puller [mm] | 150 mm |
| S1 | Width across flats [mm] | 17 mm |
| Cmin | Span outside pull-off (min.) [mm] | 0 mm |
| Cmax | Span outside pull-off (max.) [mm] | 150 mm |
| K | Hook root thickness at the tip (claw thickness K) [mm] | 3 mm |
| J | Hook base width (claw width J) [mm] | 18 mm |
| O | Hook base depth usable (claw depth usable O) [mm] | 14 mm |
| H | Total hook root depth (total claw depth H) [mm] | 41 mm |
| L | Total claw thickness (L+1mm) [mm]: (claw distance to base surface) | 8 mm |
| Tmax | Max. torque [Nm] | 120 Nm |
| Fmax | Max. tractive force [t] | 5 t |
| Fmax | Max. tensile force [kN] | 50 kN |


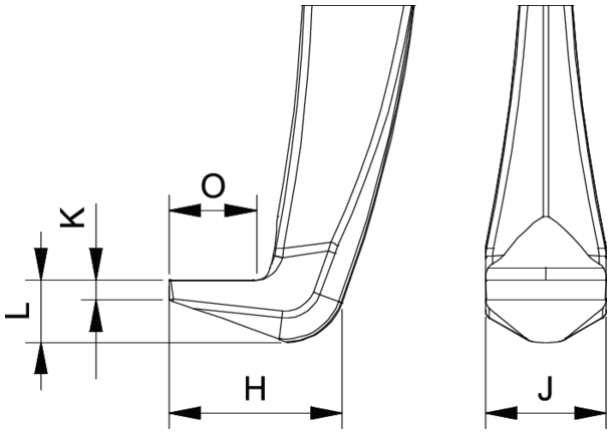


| Abbreviation | Attribut | Wert |
|---|---|---|
| X | Total width [mm] | 204 mm |
| Y | Total depth [mm] | 30 mm |
| Z | Total height [mm] | 181 mm |
| A | Clamping depth of external puller [mm] | 150 mm |
| S1 | Width across flats [mm] | 17 mm |

| | | |
|---|---|---|
| Cmin | Span outside pull-off (min.) [mm] | 0 mm |
| Cmax | Span outside pull-off (max.) [mm] | 150 mm |
| K | Hook root thickness at the tip (claw thickness K) [mm] | 3 mm |
| J | Hook base width (claw width J) [mm] | 18 mm |
| O | Hook base depth usable (claw depth usable O) [mm] | 14 mm |
| H | Total hook root depth (total claw depth H) [mm] | 41 mm |
| L | Total claw thickness (L+1mm) [mm]: (claw distance to base surface) | 8 mm |
| Tmax | Max. torque [Nm] | 120 Nm |
| Fmax | Max. tractive force [t] | 5 t |
| Fmax | Max. tensile force [kN] | 50 kN |

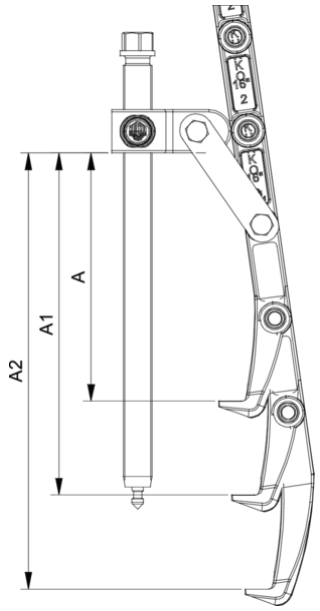


| Abbreviation | Attribut | Wert |
|---|---|---|
| X | Total width [mm] | 204 mm |
| Y | Total depth [mm] | 30 mm |
| Z | Total height [mm] | 181 mm |
| A | Clamping depth of external puller [mm] | 150 mm |
| S1 | Width across flats [mm] | 17 mm |
| Cmin | Span outside pull-off (min.) [mm] | 0 mm |
| Cmax | Span outside pull-off (max.) [mm] | 150 mm |
| K | Hook root thickness at the tip (claw thickness K) [mm] | 3 mm |
| J | Hook base width (claw width J) [mm] | 18 mm |
| O | Hook base depth usable (claw depth usable O) [mm] | 14 mm |
| H | Total hook root depth (total claw depth H) [mm] | 41 mm |
| L | Total claw thickness (L+1mm) [mm]: (claw distance to base surface) | 8 mm |
| Tmax | Max. torque [Nm] | 120 Nm |
| Fmax | Max. tractive force [t] | 5 t |
| Fmax | Max. tensile force [kN] | 50 kN |