Manometer bar | Mondolfo Ferro 3-00486

Mondolfo Ferro Aquila AS 922 · 2021 · Tekening 14 · positie 3

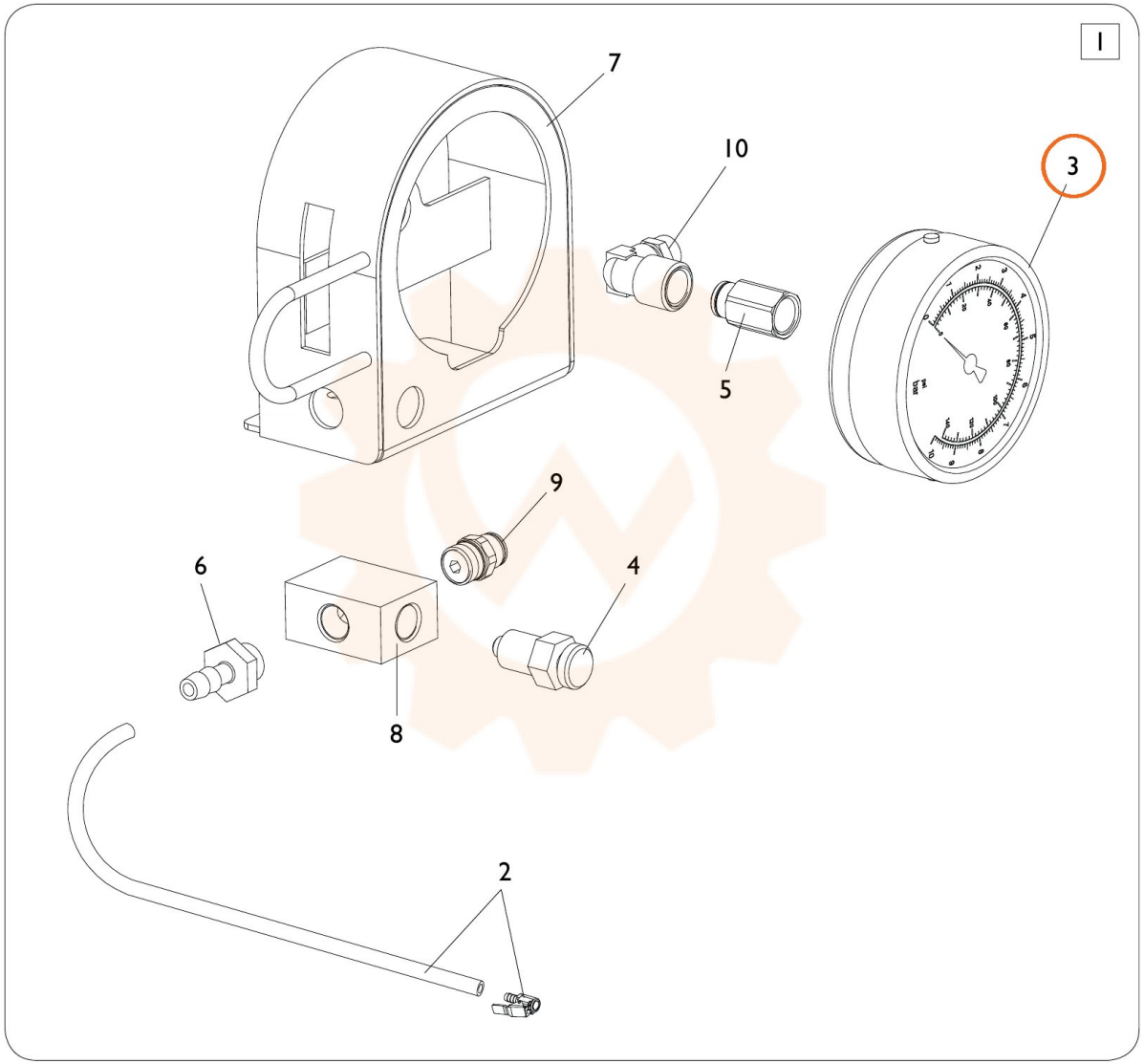
I
7
10
3
5
9
6
4
8
2