Montage | Mondolfo Ferro 5-300089B

Mondolfo Ferro MT2900 · 2006 · Tekening 3 · positie C9

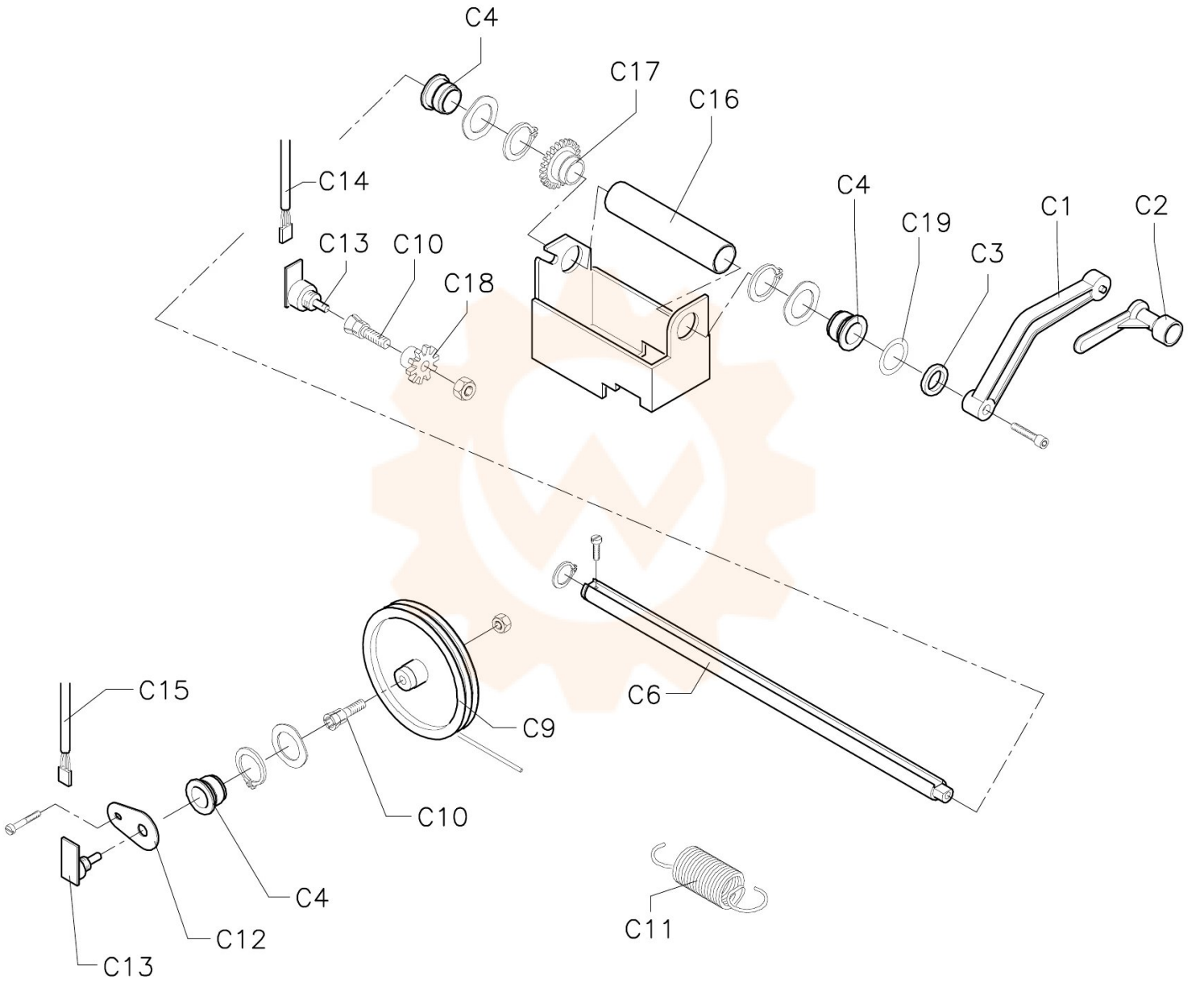
C4
C17
C16
C14
C4
C19
C1
C2
C13
C10
C3
C18
C6
C15
C9
C10
C4
C12
C13
C11