BEAD BREAKER DISC GROUP

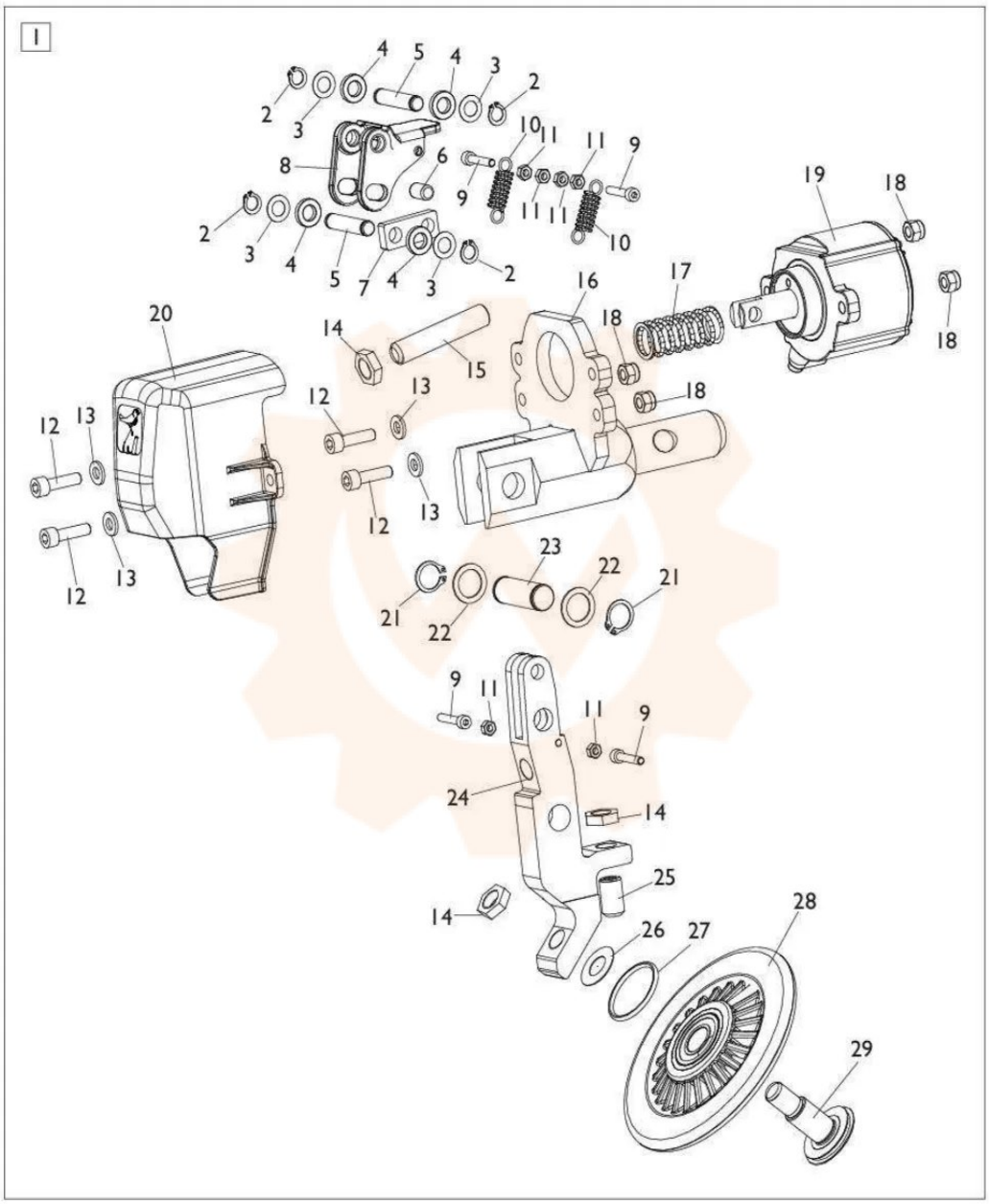

Return to Overall