O-ring | Mondolfo Ferro 421875

Mondolfo Ferro MT2080 · 2006 · Tekening 3 · positie C20

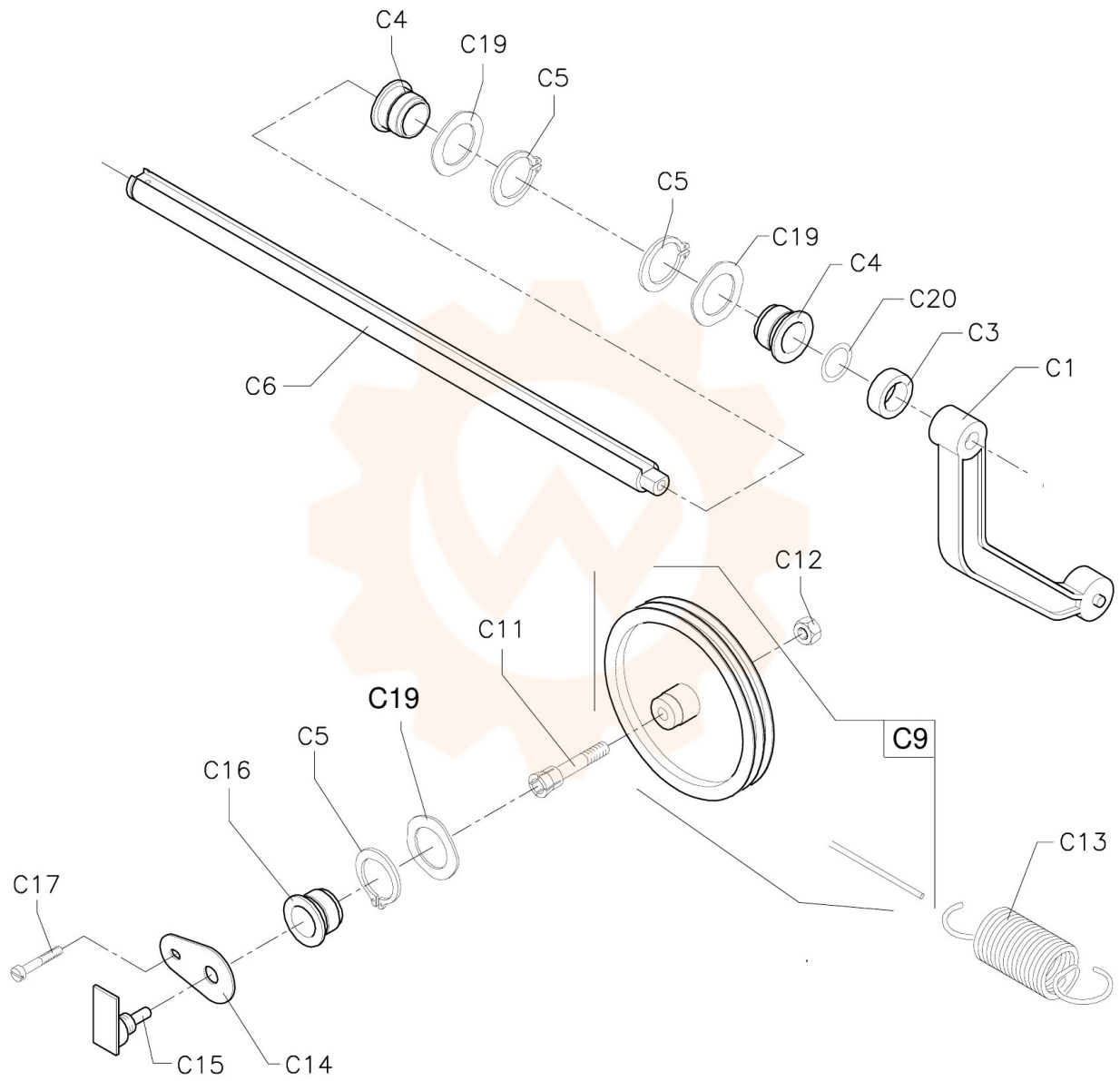
C4
C19
C5
C5
C19
C4
C20
C3
C1
C6
C12
C11
C19
C5
C16
C9
C13
C17
C15
C14