# Borgring | Mondolfo Ferro 3-900108

Corghi Exact Linear · 2016 · Tekening 2 · positie 8 (2 keer op deze tekening)

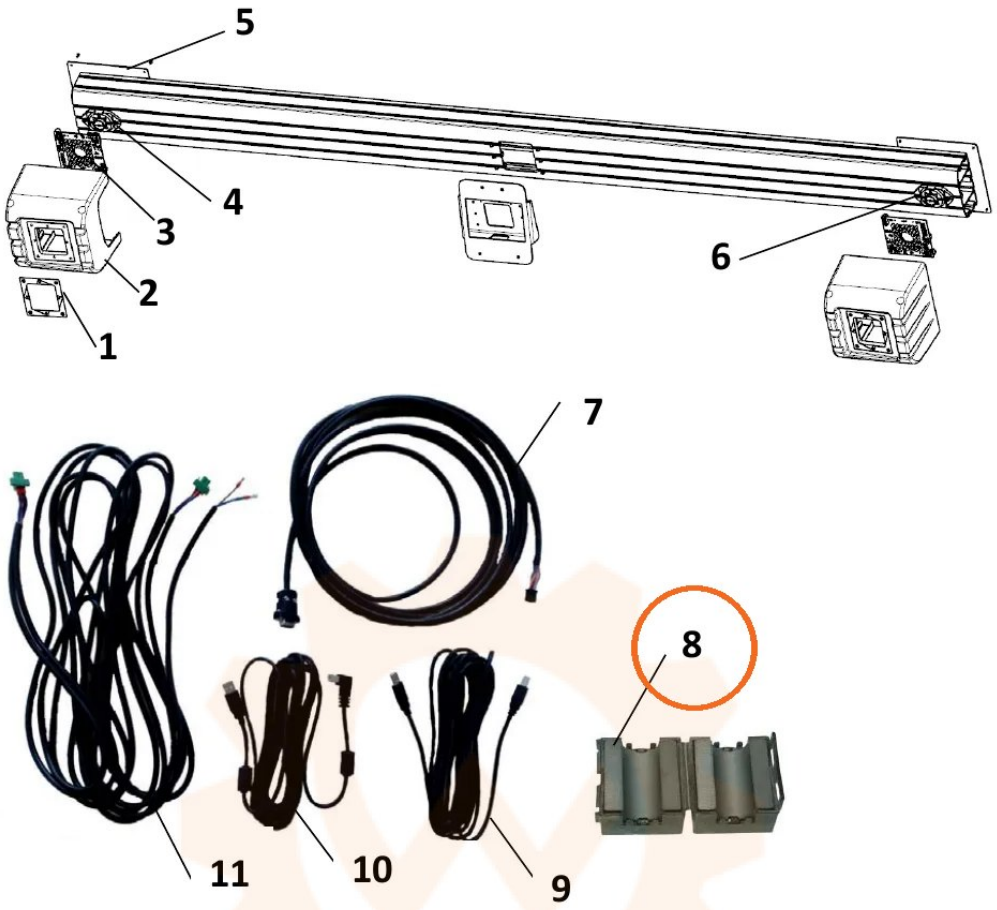


| Line No | Item Number | Item Name |
|---|---|---|
| 1 | 4-900207 | STICKER |
| 2 | 4-900214 | CAMERA COVER |
| 3 | 4-900228 | LED PCBA |
| 4 | 5-900081 | LEFT CAMERA ASSEMBLY |
| 5 | 4-900213 | REAR COVER |
| 6 | 5-900104 | RIGHT CAMERA ASSEMBLY |
| 7 | 4-900351 | CONTROL CABLE |
| 8 | 3-900108 | SNAP RING,FERRITE |
| 9 | 3-900105 | USB CABLE, STANDARD CONNECTOR |
| 10 | 3-900135 | USB CABLE, 90D CONNECTOR |
| 11 | 3-900114 | LED BOARD POWER CORD |