30-10-S 3-jaw universal puller with narrow jaws, up to 130 mm spread, 100 mm reach



APPLICATION IMAGE



DESCRIPTION

The 3-jaw universal puller with narrow jaws is used for safely removing bearings, gears, and discs in all common sizes for craft, workshop, and industry. It allows for the loosening of any component that sits on a shaft and is freely accessible from the outside. The narrow jaws ensure that even tight and poorly accessible spaces can be reached. The 3-jaw design guarantees an even load distribution and thus a particularly secure hold on the part being pulled.

APPLICATION AREA

For safe removal of bearings, gears, and discs in all common sizes for craft, workshop, and industry.

BENEFIT

- Narrow puller jaws grip optimally in tight and hard-to-reach areas.
- 3-jaw ensures an even distribution of force and allows for greater pulling forces.
- The screw connection allows for easy loosening and especially tight fastening of the jaws with an allen key
- Application also for eccentric components through freely movable, sliding jaws on the crossbar.
- Hexagonal profile on the crossbar for secure counter-holding
- Variable adjustment to any span between 8 mm – 130 mm
- Safety suspension of the claw in the sliding piece (Armlock Technology)
- Safe setup of the spindle through a swivel spindle tip on both smooth surfaces and during centering (Switch Technology)
- Optional convertible from an external puller to an internal extractor by reversing the extraction jaws.
- Anti-slip safety at the spindle neck for safe working with socket wrenches
- Spindle outlet for thread protection
- Pullers are labeled with technical attributes and manufacturer information (label)

OPERATION

- Position the puller jaws externally onto the part to be pulled off
- Slide the claws under the component
- Use a wrench to secure the jaws
- Manually pull the spindle for fixation
- Set the hexagon on the spindle head in motion with a ratchet or a combination wrench until the component is loosened

MASTER DATA

GTIN [GTIN]	4021176728198
Country of origin	DE
Material	Tool steel
Series	30-S
Gross weight [kg]	1,52 kg
Package contents	1 piece
Packaging Act	PAPPE PAP 21
Worldwide sales capability	Yes (REACH, RoHS, POP, PROP65, TSCA)

SPARE PARTS

- 1-91-S_Jaws Puller Set
- 30-10-T_Crossbar
- 612140_Double-sided spindle tip
- 614135_Mechanical Drive Spindle
- K-2030-A-KIT

3-jaw universal puller with narrow jaws, up to 130 mm spread, 100 mm reach

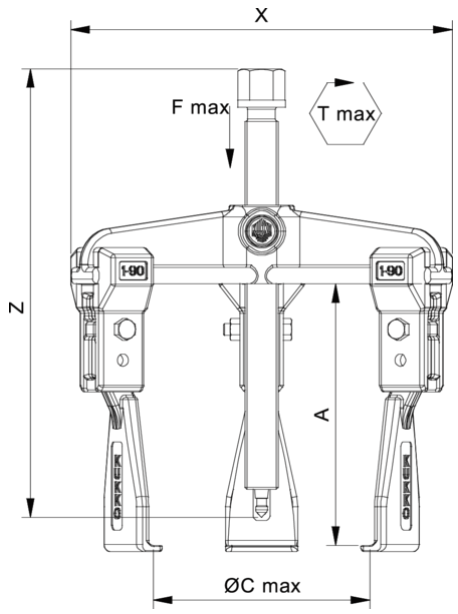

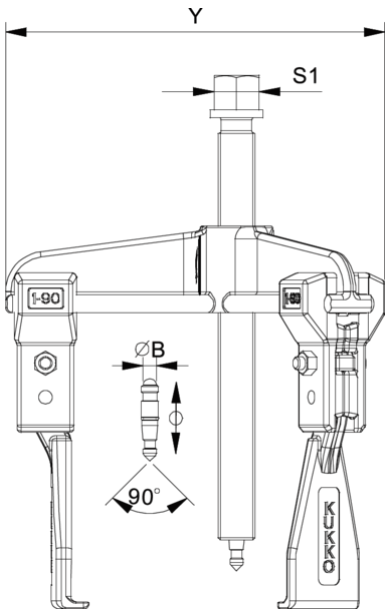

Abbreviation	Attribut	Wert
X	Total width [mm]	174 mm
Y	Total depth [mm]	174 mm
Z	Total height [mm]	158 mm
A	Clamping depth of external puller [mm]	100 mm
S1	Width across flats [mm]	17 mm
Cmin	Span outside pull-off (min.) [mm]	8 mm
Cmax	Span outside pull-off (max.) [mm]	130 mm
K	Hook root thickness at the tip (claw thickness K) [mm]	3 mm
J	Hook base width (claw width J) [mm]	30 mm
O	Hook base depth usable (claw depth usable O) [mm]	9,5 mm
H	Total hook root depth (total claw depth H) [mm]	13 mm
L	Total claw thickness (L+1mm) [mm]: (claw distance to base surface)	2,6 mm
Emin	Span inside pull-out (min.) [mm]	70 mm
Emax	Span inside pull-out (max.) [mm]	180 mm
Tmax	Max. torque [Nm]	40 Nm
Fmax	Max. tractive force [t]	3 t
Fmax	Max. tensile force [kN]	30 kN

Abbreviation	Attribut	Wert
X	Total width [mm]	174 mm
Y	Total depth [mm]	174 mm
Z	Total height [mm]	158 mm
A	Clamping depth of external puller [mm]	100 mm
S1	Width across flats [mm]	17 mm
Cmin	Span outside pull-off (min.) [mm]	8 mm
Cmax	Span outside pull-off (max.) [mm]	130 mm
K	Hook root thickness at the tip (claw thickness K) [mm]	3 mm
J	Hook base width (claw width J) [mm]	30 mm
O	Hook base depth usable (claw depth usable O) [mm]	9,5 mm
H	Total hook root depth (total claw depth H) [mm]	13 mm
L	Total claw thickness (L+1mm) [mm]: (claw distance to base surface)	2,6 mm
Emin	Span inside pull-out (min.) [mm]	70 mm
Emax	Span inside pull-out (max.) [mm]	180 mm
Tmax	Max. torque [Nm]	40 Nm
Fmax	Max. tractive force [t]	3 t
Fmax	Max. tensile force [kN]	30 kN

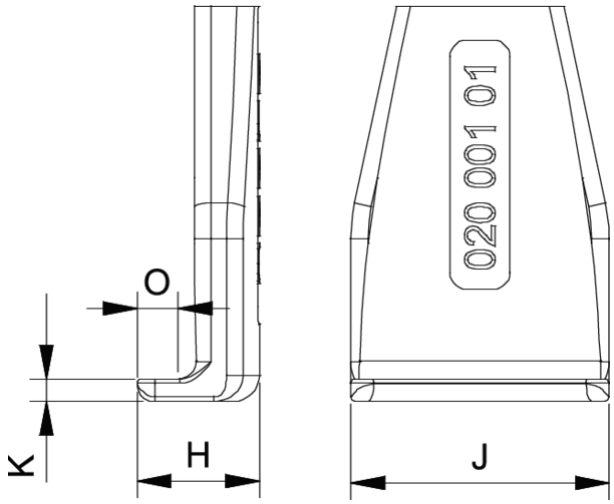

Abbreviation	Attribut	Wert

X	Total width [mm]	174 mm
Y	Total depth [mm]	174 mm
Z	Total height [mm]	158 mm
A	Clamping depth of external puller [mm]	100 mm
S1	Width across flats [mm]	17 mm
Cmin	Span outside pull-off (min.) [mm]	8 mm
Cmax	Span outside pull-off (max.) [mm]	130 mm
K	Hook root thickness at the tip (claw thickness K) [mm]	3 mm
J	Hook base width (claw width J) [mm]	30 mm
O	Hook base depth usable (claw depth usable O) [mm]	9,5 mm
H	Total hook root depth (total claw depth H) [mm]	13 mm
L	Total claw thickness (L+1mm) [mm]: (claw distance to base surface)	2,6 mm
Emin	Span inside pull-out (min.) [mm]	70 mm
Emax	Span inside pull-out (max.) [mm]	180 mm
Tmax	Max. torque [Nm]	40 Nm
Fmax	Max. tractive force [t]	3 t
Fmax	Max. tensile force [kN]	30 kN

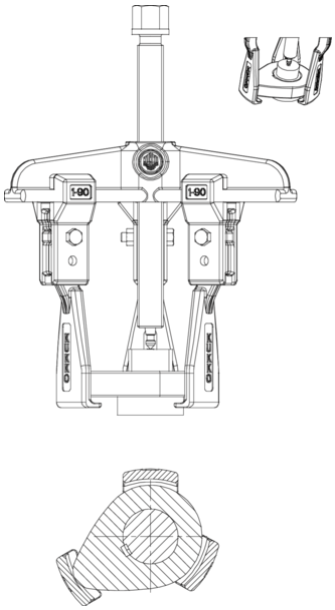

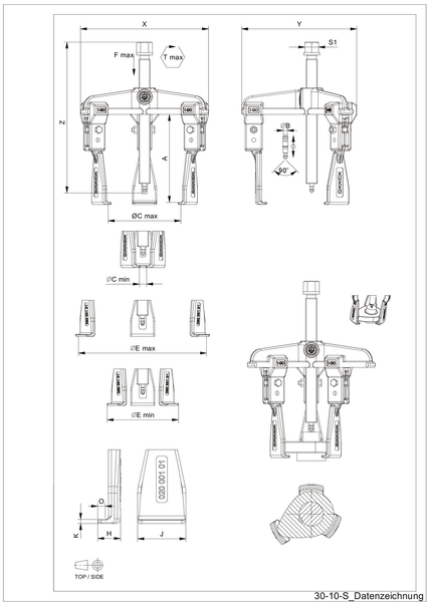

30-10-S_Datenzeichnung

Abbreviation	Attribut	Wert
X	Total width [mm]	174 mm
Y	Total depth [mm]	174 mm
Z	Total height [mm]	158 mm
A	Clamping depth of external puller [mm]	100 mm
S1	Width across flats [mm]	17 mm
Cmin	Span outside pull-off (min.) [mm]	8 mm
Cmax	Span outside pull-off (max.) [mm]	130 mm
K	Hook root thickness at the tip (claw thickness K) [mm]	3 mm
J	Hook base width (claw width J) [mm]	30 mm
O	Hook base depth usable (claw depth usable O) [mm]	9,5 mm
H	Total hook root depth (total claw depth H) [mm]	13 mm
L	Total claw thickness (L+1mm) [mm]: (claw distance to base surface)	2,6 mm
Emin	Span inside pull-out (min.) [mm]	70 mm
Emax	Span inside pull-out (max.) [mm]	180 mm

Abbreviation	Attribut	Wert
X	Total width [mm]	174 mm
Y	Total depth [mm]	174 mm
Z	Total height [mm]	158 mm
A	Clamping depth of external puller [mm]	100 mm
S1	Width across flats [mm]	17 mm
Cmin	Span outside pull-off (min.) [mm]	8 mm
Cmax	Span outside pull-off (max.) [mm]	130 mm
K	Hook root thickness at the tip (claw thickness K) [mm]	3 mm
J	Hook base width (claw width J) [mm]	30 mm
O	Hook base depth usable (claw depth usable O) [mm]	9,5 mm
H	Total hook root depth (total claw depth H) [mm]	13 mm
L	Total claw thickness (L+1mm) [mm]: (claw distance to base surface)	2,6 mm
Emin	Span inside pull-out (min.) [mm]	70 mm
Emax	Span inside pull-out (max.) [mm]	180 mm

Tmax	Max. torque [Nm]	40 Nm
Fmax	Max. tractive force [t]	3 t
Fmax	Max. tensile force [kN]	30 kN