20-2+S 2-jaw universal puller with narrow, quick adjustment jaws, up to 160 mm spread, 150 mm reach



APPLICATION IMAGE



DESCRIPTION

The 2-jaw universal puller with narrow, quickly adjustable jaws is used for the safe and user-friendly removal of bearings, gears, and discs in all common sizes for craft, workshop, and industry. This allows for the loosening of any component seated on a shaft and freely accessible from the outside. The narrow jaws ensure that even tight and hard-to-reach gaps can be accessed.

APPLICATION AREA

For the safe and user-friendly removal of bearings, gears, and discs in all common sizes for crafts, workshops, and industry.

BENEFIT

- Narrow jaws grip optimally in tight and hard-to-reach places.
- Simple manual adjustment of the jaws using hand knobs (Quick Adjust Technology)
- Application also for eccentric components through freely movable, sliding puller jaws on the crossbar.
- Hexagonal profile on the crossbar for secure counterholding
- Quick-adjustable jaws guarantee immediate adjustment to any spread between 16 mm – 160 mm
- Shear-proof mounting of the claw in the sliding piece (Armlock Technology)
- Secure installation of the spindle with rotatable spindle tip on both smooth surfaces and in centering (Switch Technology)
- Optional convertible from an external puller to an internal puller by reversing the jaws.
- Anti-slip safety (spindle neck) at the spindle head for safe work with the wrench
- Spindle output to protect the thread
- Jaws, spindle, and crossbar have a spare part number for easy reordering.
- Pullers are labeled with technical attributes and manufacturer information (label)

OPERATION

- Position the puller jaws externally onto the part to be pulled off
- Slide the claws under the component
- Use the hand knob for manual fastening of the jaws
- Manually pull the spindle for fixation
- Set the hexagon on the spindle head in motion with a ratchet or a wrench until the component is loosened

MASTER DATA

GTIN [GTIN]	4021176756481
Country of origin	DE
Material	Tool steel
Series	20+S
Gross weight [kg]	3,04 kg
Package contents	1 piece
Packaging Act	PAPPE PAP 21
Worldwide sales capability	Yes (REACH, RoHS, POP, PROP65, TSCA)

SPARE PARTS

- 2-153-P_Schmale, quick-adjustable jaws (Pair)
- 20-2-T_Crossbar for 20-2
- 620260_Two-sided spindle tip
- 621220_Mechanical pressure spindle

2-jaw universal puller with narrow, quick adjustment jaws, up to 160 mm spread, 150 mm reach

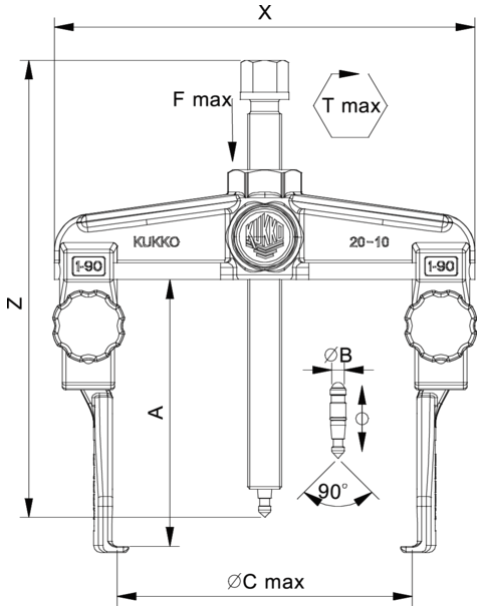

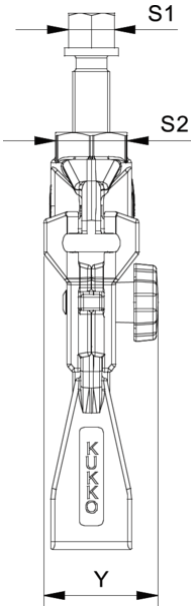

Abbreviation	Attribut	Wert
X	Total width [mm]	216 mm
Y	Total depth [mm]	50 mm
Z	Total height [mm]	254 mm
A	Clamping depth of external puller [mm]	150 mm
S1	Width across flats [mm]	22 mm
S2	Width across flats [mm]	36 mm
Cmin	Span outside pull-off (min.) [mm]	16 mm
Cmax	Span outside pull-off (max.) [mm]	160 mm
K	Hook root thickness at the tip (claw thickness K) [mm]	4 mm
J	Hook base width (claw width J) [mm]	32 mm
O	Hook base depth usable (claw depth usable O) [mm]	12 mm
H	Total hook root depth (total claw depth H) [mm]	20 mm
L	Total claw thickness (L+1mm) [mm]: (claw distance to base surface)	4 mm
Emin	Span inside pull-out (min.) [mm]	100 mm
Emax	Span inside pull-out (max.) [mm]	220 mm
Tmax	Max. torque [Nm]	120 Nm
Fmax	Max. tractive force [t]	5 t
Fmax	Max. tensile force [kN]	50 kN

Abbreviation	Attribut	Wert
X	Total width [mm]	216 mm
Y	Total depth [mm]	50 mm
Z	Total height [mm]	254 mm
A	Clamping depth of external puller [mm]	150 mm
S1	Width across flats [mm]	22 mm
S2	Width across flats [mm]	36 mm
Cmin	Span outside pull-off (min.) [mm]	16 mm
Cmax	Span outside pull-off (max.) [mm]	160 mm
K	Hook root thickness at the tip (claw thickness K) [mm]	4 mm
J	Hook base width (claw width J) [mm]	32 mm
O	Hook base depth usable (claw depth usable O) [mm]	12 mm
H	Total hook root depth (total claw depth H) [mm]	20 mm
L	Total claw thickness (L+1mm) [mm]: (claw distance to base surface)	4 mm
Emin	Span inside pull-out (min.) [mm]	100 mm
Emax	Span inside pull-out (max.) [mm]	220 mm
Tmax	Max. torque [Nm]	120 Nm
Fmax	Max. tractive force [t]	5 t
Fmax	Max. tensile force [kN]	50 kN

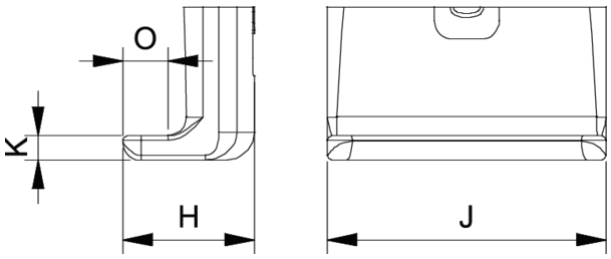

Abbreviation	Attribut	Wert
X	Total width [mm]	216 mm
Y	Total depth [mm]	50 mm
Z	Total height [mm]	254 mm
A	Clamping depth of external puller [mm]	150 mm
S1	Width across flats [mm]	22 mm
S2	Width across flats [mm]	36 mm
Cmin	Span outside pull-off (min.) [mm]	16 mm
Cmax	Span outside pull-off (max.) [mm]	160 mm
K	Hook root thickness at the tip (claw thickness K) [mm]	4 mm
J	Hook base width (claw width J) [mm]	32 mm

O	Hook base depth usable (claw depth usable O) [mm]	12 mm
H	Total hook root depth (total claw depth H) [mm]	20 mm
L	Total claw thickness (L+1mm) [mm]: (claw distance to base surface)	4 mm
Emin	Span inside pull-out (min.) [mm]	100 mm
Emax	Span inside pull-out (max.) [mm]	220 mm
Tmax	Max. torque [Nm]	120 Nm
Fmax	Max. tractive force [t]	5 t
Fmax	Max. tensile force [kN]	50 kN